CKT688

Insulation Resistance Meter

USER MANUAL

Simplified English

2019

Rev2.1

CHANGZHOU CHUANGKAI ELECTRONIC CO.LTD

Persure Perfect

Condition

Foreword

Thank you for purchasing the products of Changzhou Chuangkai Electronic Co., Ltd.

Please read this manual carefully before use.

In this chapter you will learn about the following:

- Safety instructions
- Company description
- Security Information
- Limited warranty and scope of

Safety instructions

This manual describes the information and precautions required to operate the instrument safelyand maintain the safe state of the instrument. Please read carefully before proceeding. Please read the following safety-related items carefully to ensure safe and optimized use.

Disclaimer: Please read the following safety information carefully before starting to use the instrument. We will not assume any responsibility for personal safety and property losses caused by failure to comply with the following terms.

⚠Caveat

The instrument has been designed and tested safely before leaving the factory and shipped in a safe state. If the measurement method was incorrect, it may lead to personal accidents and instrument malfunction. Please read the instructions carefully and operate after fully understanding the content. In the event of an accident, we will not be responsible except for the reasons of our products.

⚠Warning

⚠Danger

When you find that the following abnormal conditions have occurred, please immediately terminate the operation and disconnect the power cord. Immediately contact Chuangkai Electronic Co., Ltd Sales Department for maintenance. Otherwise, it may cause fire or potential electric shock hazard to the operator.

- The instrument is operating abnormally.
- The instrument produces abnormal noise, odor, smoke or flash during operation.
- During operation, the instrument generates high temperatures or electric shocks.
- The power cord, power switch, or power outlet is damaged.
- Impurities or liquids flow into the instrument.

⚠ **Caveat:**

🚫 **This instrument strictly forbidslive testing of the tested**

Security Information

Symbol on the instrument

⚠	Indicates attention and danger. When the symbol or display is on the instrument, please refer to the corresponding position of the manual.
~	Indicates alternating current (ac)
⏚	Indicates earth (ground) terminal

Safety symbol: The precautions in this manual are marked as follows according to their importance.

⚠ **Caveat**	Indicates attention and danger.
⚠ **Danger**	Indicates an extremely high risk of death or serious injury to the user if an operational error or misuse occurs.
⚠ **Note**	The product may cause damage to the product itself or other products under certain circumstances or in actual application.
⃠	Indicates prohibited behavior

Symbols related to standards:

	Marking of laws and regulations on the abandonment of electrical and electronic equipment

Other symbols:

	Details: indicates tips, details
	Convention: indicates the agreement
Or ⇒	Reference: indicates where the reference content or reference is located
⏚	Indicates earth (ground) terminal
⎓	Indicates direct current (dc)
~	Indicates alternating current (ac)
I	Indicates that the power is "on"
O	Indicates that the power is "off"

Limited warranty and scope of responsibility

Changzhou Chuangkai Electronic Co., Ltd guarantees that every CKT688/B series instrument you purchase is completely qualified in quality and measurement. This warranty does not include fuses.

Chuangkai promises that the instrument mainframe and accessories produced by Chuangkai will not have any defects in material and process defects during the warranty period. During the warranty period, if the product proves to be defective, Chuangkai will repair or replace it for free.

From the date of shipment, Chuangkai promises to guarantee the warranty of its product' s mainframe for two years and other accessories for one year. For hardware and software failures caused by the quality of the product itself during the warranty period, please present the product warranty card and maintenance registration card, and the product will be repaired free of charge by Chuangkai Maintenance Department or Chuangkai authorized maintenance point. For products that exceed the warranty period, Chuangkai will perform paid repairs for the user.

For products that are repaired free of charge (no special problems), Chuangkai promises to repair and return to the user within five working days after receiving the instrument, and bear the transportation cost of the return journey.

Chuangkai will not carry out free repairs if one of the following conditions occurs:

1、 Accidental damage caused during transportation.

2、 Instrument malfunction or damage caused by incorrect installation or use in a non-product specified working environment.

3、 The appearance of the product is artificially damaged (such as surface scratches, deformation, etc.).

4、 Unauthorized dis-assembly of the machine for repair, modification, replacement of parts and tearing of the product warranty seal.

5、 Failure or damage caused by irresistible factors such as lightning strikes.

6、 Direct or indirect damage caused by improper user operation.

If the instrument is inaccurate or cannot be measured due to improper operation of the user, the instrument itself has no problem, and the return cost is borne by the user.

Jiangsu Province, China

Changzhou Chuangkai Electronic Co., Ltd

Company description

Note

The descriptions in this manual may not be all the contents of the instrument. The information contained in the manual has been corrected before printing. However, as Chuangkai Electronic Co., Ltd continuously improves the products, it reserves the right to modify the product specifications, characteristics, internal structure, appearance, accessories, packaging and maintenance procedures of the produces in the future. Therefore, the contents may be changed without prior notice. The confusion caused by inconsistency between the instructions manual and the instrument can be contacted with our company by the address on the back cover of the manual; the latest news and content can also be found on the company website.

Table of contents

Foreword 1

Safety instructions 2

Security Information 2

Symbol on the instrument 2

Limited warranty and scope of responsibility 4

Company description 4

Chapter 1 Usage Precautions 7

Packing content confirmation 7

Precautions for use 8

Instructions for Firmware Upgrades 12

Chapter 2 Product Overview 13

2.1 Product overview and model designation 13

2.2 Technical specifications, features, and main functions 14

2.3 Product description (Designation and function of components) 15

2.3.1 Description of front panel 15

2.3.2 Key areas 16

2.3.3 Measurement display screen--- Homescreen (definition of display area) 17

2.3.4 Overview of rear panel 19

2.3.5 Base bracket 20

Chapter 3 Measurement Preps 22

3.1 Preparation process 22

3.2 Connect power cord 23

3.3 Connect test cable to the DUT 23

3.4 Connection of foot switch (if required) 24

3.5 Connection of external interface cables 25

3.6 Power ON/OFF 26

3.7 Parameter setting of the meter 27

3.8 0 ADJ 27

3.9 Start test 28

Chapter 4 Setting of Measurement Parameters (Basic Setting) 31

4.1 Confirmation of DUT 31

4.2 Parameter setting and numeric value input method 33

4.3 Introduction to measurement setting screen and parameter setting 33

Chapter 5 System Setting and File Management 40

5.1 System setting screen 40

5.2 File system screen 42

5.3 Description of file system (file types to be stored or recalled/save test data) 45

Chapter 6 Sorting Comparator 47

6.1 Sorting screen 47

6.2 Ring 49

6.3 PASS/FAIL indicator 50

6.4 Sorting process 50

Chapter 7 Remote Control 51

7.1 RS232 / 485 communication mode 51

7.2 Communication protocol of meter 52

7.3 HANDLER communication mode 61

7.4 Foot switch 62

Chapter 8 Maintenance and Service 63

8.1 About calibration 63

8.2 Packaging and transportation 63

8.3 Storage 63

8.4 Warranty 63

8.5 Cleaning 64

8.6 About disposal 64

Annex A: Specifications 65

TechnicalIndexes 65

Technical Specifications: 66

Annex B: Type Selection Table 68

Type Selection Table of Electrode Box 68

Type Selection Table of Insulation Resistance Meter 69

Chapter 1 Usage Precautions

In this chapter you will learn about the following:

- Packing content confirmation
- Precautions for use
- Instructions for Firmware Upgrades

Packing content confirmation

Please confirm before use: When the instrument is delivered to your hand, please check and confirm:

1、Please check the appearance of the product for damage or scratches.

2、Check the instrument accessories for any omissions according to the following table:

Table 1-1 Instrument Accessories

Seri	Name	Specification	Quan	Unit	Remarks
1	Instrument	CKT688/B	1	set	Standard
2	Three-terminal test cable		1	set	Standard
3	Three-phase power cord		1	set	Standard
4	fuse		2	set	Standard
5	RS232 communication		1	piece	Standard
6	USB communication		1	set	Standard
7	user's manual		1	set	Standard
8	Verification report		1	set	Standard
9	Product certification		1	set	Standard
10	Warranty		1	set	Standard

If there is any damage or insufficient accessories, please contact the sales department or distributor of Changzhou Chuangkai Electronic Co., Ltd immediately.Whentransporting this instrument, please use the packaging materials at the time of delivery.

Table 1-2 Optional Accessories

Seri	Name	Specification	Quan	Unit	Remarks
1	Foot switch		1	set	Optional
2	HANDLER Junction box		1	set	Optional
3	Data software		1	set	Optional
4	Electrode box		1	set	Optional
5	Electrode cable		1	set	Optional

Customers can choose according to their own requirements. If there is any damage or not matching with their own selection, please contact the sales department or distributor of Changzhou Chuangkai Electronic Co., Ltd immediately.

Consult	The complete version of electrode box selection is shown in Appendix B.

Precautions for use

In order to use the instrument safely and to make full use of its functions, please observe the following precautions.

Danger	For prevention against electric shock, never attempt to remove the enclosure; be aware of high voltage and heated parts
Warning	Never attempt to modify, dismantle or repair it, otherwise it may cause an accident or personal wound. Do not wet this meter or perform measurement with wet hands, otherwiseit may cause electric shock.
Caution	For prevention of physical damage, avoid vibration or collision in handling and use, with special caution against any fault caused by falling off. This meter should be transported with the packaging material intended for delivery.

1. Placement and Ambient Conditions of this Meter

- Ambient conditions

CKT688/B series must be used only under the following ambient conditions:

1) Temperature and humidity range Temperature: 0 ～ 40 ℃ Humidity: ＜80%RH (no condensation)

2) Temperature and humidity range for the sake of guaranteed accuracy Temperature: 23 ± 5 ℃ Humidity: ＜80%RH (no condensation)

3) For good ventilation of this test meter, never clog the vent hole.

4) This meter, especially the test lead connecting the DUT should keep away from strong electromagnetic field for fear of causing interference to the measurement process.

Warning	**Never attempt to place this meter in the following sites, otherwise it may cause malfunctioning or accident.** ● Any site exposed to sunlight or heat ● Any site where corrosive and explosive gases are produced ● Any site where strong electromagnetic waves are generated or geographically adjacent to live parts ● Any site vulnerable to frequent mechanical vibrations ● Any damp or condensatedsite ● Any dusty site ● Any site near the induction heating unit (high-frequency induction heating unit, IH electromagnetic oven, etc.) ● Any site subject to water, oil, chemical agents and solvents and other impacts

Caution

Do not use this meternear any unit from which noise is generated. If the noise affects the DUT, the measured value may become unstable.

- **How to place:**

1) To prevent the meter from heating up, make sure that it keeps the specified distance from the peripherals.

2) Place it with the bottom down. This meter can be used when erected with a bracket.

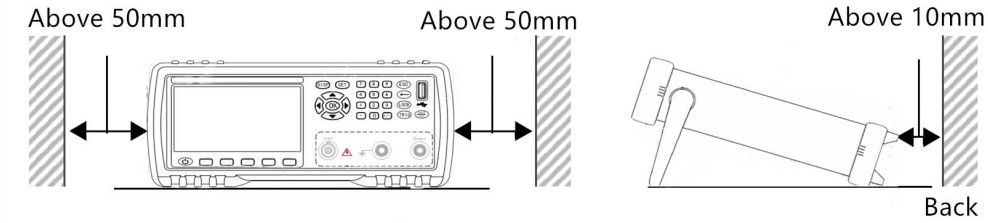

Caution

- To switch off the meter, unplug the cord; or in case of emergency, unplug the cord to immediately switch off; therefore, make sure that the operation space is adequate.
- Do not place it on any unstable bench or slant area, otherwise it may cause personal wound or malfunctioning due to falling off or overturn.

1. Mains Requirements

CKT688/B series can only be used under the following power conditions:

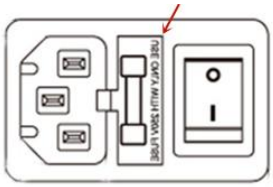

1) Mains voltage range: AC 220V±10% Mains frequency: 50Hz/60Hz Power: ≤30VA

2) Mains phase line L, neutral line N, earth line E should be the same as the plug of this meter

3) This meterhas been well-designed to reduce noise interference from AC power input, but it should be used under low-noise conditions as much as practicable. If some circumstances cannot be avoided, install a power filter.

Danger

- For prevention of electric shock, connect the mains earth wire to ground reliably
- If user replaces a new power cord, make sure that the power cord can be reliably connected.

Warning

- Confirm whether the sheathsof power cord and test lead are damaged or have exposed metal. As these damages may lead to electric shock, please replace with our specified model.
- Prior to power-on, confirm whether the mains voltage as recorded on the power connection of this meter is the same as that in use. Any non-specified mains voltage may cause damge or electric hazard.
- For prevention of electric shock and safety, connect the power cord of this meter to a three-phase socket.

3. Fuse

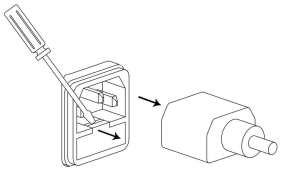

1) The meter has been accompanied with a fuse before delivery and must be used by user.

2) Fuse replacement. Open the fuse block on the rear panel socket, then replace the fuse.

- Unplug the cord and unload the fuse block with a screwdriver as shown on the right:

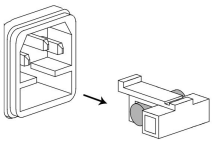

- Replace the fuse as shown on the right:

Warning

For avoidance against personal wound, keep the power off before fuse replacement.

4. Measurement Considerations

Danger

- As there is high voltage output from the test lead, do not touch any metal part at the tip of the test lead to prevent from electric shock.

- **For use of power cords, test cables and leads**

Use the accompanying power cord, test clip or cable, user-made or other text clip or cable may lead to incorrect measured value. Test clip or cable should be always clean, the lead wire of the DUT should be always clean, so that DUT can contact well with the test clip.

Danger

- To avoid electric shock or short circuit, turn off the power of the DUT before connecting test cable.
- To avoid electric shock or short circuit, do not short the tip of the test lead and any charged line.

Warning

- To avoid electric shock, do not touch any metal part at the tip of the test lead to prevent from electric shock.
- The tip of test clip is sharp and very dangerous, be aware of danger in use for fear of getting wounded.

Caution

- To prevent the wires and test cables from damage, do not tread on or pinch wires or test cables.
- To prevent malfunctioning due to broken wire, do not bend or pull the connection of wires or cables.
- To prevent against broken wire, extract the wire from socket or this meter with theplug (other than the cord) gripped.
- To prevent against broken wire, extract the connector with the insertion (other than the cable) gripped.
- If any wire is melt down, the metal part will be exposed, this would be a very dangerous situation, do not touch any heating part.

- Prior to measurement

To attain the test accuracy, preheat the meter over 30 minutes.

Warning

Measure the insulation resistance device or press TRIG, there is hazardous voltage generated on the measuring terminals. For avoidance of electric shock, do not touch the tip of test lead.

Caution

To avoid the meter from damage, do not feed voltage or current onto the measurement terminals.

- Measurement considerations

Caution

- During the test, do not touch the DUT, the tip of probe and measuring terminals.
- Just after the test, do not touch the tip of probe and measuring terminals, otherwise it may cause electric shock due to high voltage charges.
- To prevent electric shock, make use of the discharge function of this meter to discharge the DUT.

Warning

- Never make any modification, or ask any person other than repair technician to dissemble or repair.

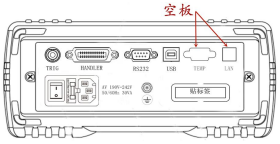

- (TEMP), (LAN) on the rear panel of CKT688 is bare board. To prevent electric shock, never attempt to remove the bare board.
- The bare board on the rear panel of CKT688 is as shown on the right.

Instructions for Firmware Upgrades

This meter will be upgraded by the following procedure:

1、Copy upgrade files to the root directory of U flash disk (with memory ≤4G) and insert the U disk to USB interface of this meter

2、Press <SET> to turn on the meter until "U DISK READ SUCCESS" appears on the screen

3、Press <OK> for upgrading until the screen turns white or jumps to the boot screen. Turn on the meter to complete the upgrading process.

Warning

Run the designated upgrade software as instructed from our technician, otherwise this meter will be malfunctioning or cause accident.

Chapter 2 Product Overview

By reading this chapter, you will learn about:

- Product overview and model designation
- Technical specifications, features and functions
- Product description

2.1 Product overview and model designation

Overview

Relying on accumulated technologies for years and current market needs, Changzhou Chuangkai Electronic Co.Ltd has placed CKT688 series insulation resistance meterinto market. It may function as an ultra-high resistance megger or micro-current meter.

The meter is a specially designed meter configured with the current popular 32bits CPU and high-density SMD technique,four components (insulation resistance meter, picoammeter, digital potentiometer, and digital high voltage source meter) are in-built. Colored LCD display looks nice, visualized and reliable. Any voltage output within 0.5V-1000V is supported to reach all desired test voltages, with voltage read-back feature, 7 ranges are optional for test to ensure the insulation resistance measurement accessible to: 10KΩ-10TΩ, maximum digits: 9999. Ultra-high-speed test can provide the best option for automated production. This meter is available for sorting, sorting alarm setting, and Handlerinterface can be added if desired, and is applicable to automated sorting system to complete automated assembly line test. This product is well-functioning, user-friendly and nice-looking. It can display insulation resistance/leakage current test. CKT688/B can be easily operated on on-line assembly line, and is equipped with a communication interface that allows for non-local operation of all functions via computer. This meteris highly resistant to interference, and the test results are stable and reliable.

CKT688/B series insulation resistance meter is a measuring meter that can readily measure the insulation performance of electronic components,dielectric materials, devices, wires and cables, and is applicable to the resistance test of industrial and mining establishments, research institutes, computer rooms, and antistatic facilities, the resistance measurement of insulation materials, and the measurement of feeble currents (for example, measurement of photoelectric effect and dark current running through components).

Model Designation

In response to different user requests, CKT688 series are available in 2 models.

Model	Measuring Range
Standard Version: CKT688	Resistance: 10KΩ－10TΩ Current: 0.01nA－1mA (1000V)
Standard Version: CKT688B	Resistance: 10KΩ－5TΩ Current: 0.01nA－1mA (500V)

Consult

The complete version of type selection of the insulation resistance meter is available in Annex B.

As arranged

A full set of all versions are described in this Manual.

2.2 Technical specifications, features, and main functions

Technical specifications of CKT688 series contain the general technical indexes of this meter and the permitted range of meter test. These specifications can be realized upon delivery.

Consult

Further details of complete technical specifications are available in Annex A.

Main features and functions:

1. Super bright, ultra HD 4.3’’ LCD display: pixels: 480*272, several parameters are displayed simultaneously.
2. Sorting result, insulation resistance and leakage current are displayed on the same screen.
3. Multiple TRIG modes: internal TRIG, external TRIG, foot switch TRIG, interface TRIG.
4. Correction function: full range open-circuit zero function.
5. Comparator (sorting) function: built-in 4-Bin sorting data, PASS/FAIL judgment on the DUT.
   - Comparator function display: directly shown as mark on LCD.
   - Comparator output: further details of sorting results are output through the optional Handler interface and RS232 interface.
   - Alarm: PASS/FAIL alarm can be set or alarm can be turned off.
6. Programmable sequential test mode: material charging time, waiting time, measurement time, and discharge time can be set.
7. 5 groups of test parameters can be saved in the meter.
8. Foot switch startup supported
9. Interface function:
   - Handler interface: sorting result and EOM end signal output, TRIG signal input.
   - RS232 interface: three-wire simple serial interface serves to communicate and

connect with the host.

- USB HOST: USB communication cable services to communicate and connect with the host computer.
- USB DEVICE: U disk is connected to the meter and save the test data. Remote firmware upgrades supported.

2.3 Product description (Designation and function of components)

2.3.1 Description of front panel

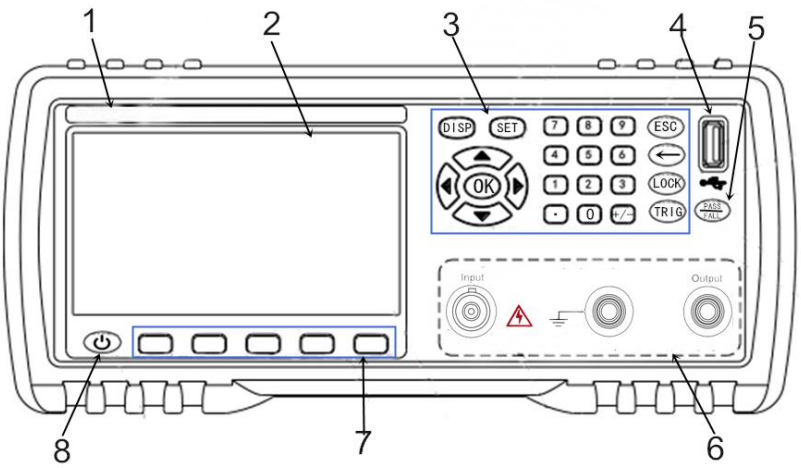

FIG.2-1 Front panel

1、Trademark and model-Trademark and model of the meter.

2、LCD-480×272 pixels, 24-bit color, colored TFT IPS LCD, for setting of test conditions and measurement

3、Key Area 2 - A group of universal keys, including numeric keys, arrow keys, ESC.

Consult	Further details are available in Section2.3.2 “Key areas”

4、USB DEVICE——USB DEVICE interface. It serves to save test data in U disk and firmware upgrades.

5、PASS/FALL indicator——An indicator showing that the sorting process is passed. Test data is passed if the green indicator becomes lit; failed if the red indicator becomes lit.

6、Test terminal (input terminal) ——three test terminals. Input terminal is connected to the test cable for DUT measurement.

Output: voltage output (-); Input: current sampling input (+); GUARD: earth shield terminal.

Consult	Further details are available in Section 3.3 “Connection of test terminal”.

7、Soft key area——Desired function in the lower part of the LCD can be selected from this area.

Consult	Further details are available in Section 2.3.2 “Key area”.

8、Standby switch——Press and hold the standby key, the meter is in standy mode, the standby key turns red. Press the standby key again, the meterswitches to working state and the standby key turns green. In standby state, turn off the power switch in the rear part of the box if needed.

2.3.2 Key areas

1、Key Area 1: main function soft keys

In the lower part of the LCD screen, the desired function in the lower part of the LCD screen can be selected, as shown on the upper right.

As arranged	Five “dark gray” keys without word on the keys in the lower part of the screen is Key Area 1, i.e.: main function keys. Five keys located in Key Area 1 have “soft” functions, which means their functions are not fixed, different functions may exist on different screens, but their current functions are as shown in the “soft key” area in the lower part of the LCD.

2、Key Area 2: numeric keys, arrow (up, down, left, right) keys, OK, ESC, BACKSPACE (←), LOCK, TRIG, SET, DISP.

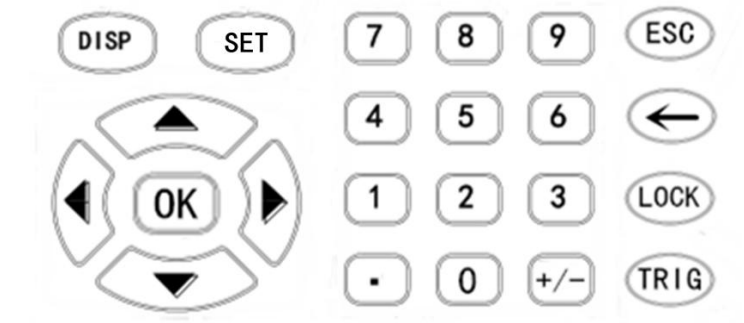

FIG.2-2 Key Area 2

1）、Universal arrow keys

Up, down, left and right as four arrow keys serve to move the cursor and select and set parameters.

2）、OK KEY

This key serves to confirm numeric values and other parameters.

3）、[DISP] menu key to display home screen

Main menu key for measurement. Press [DISP] key, go to the "Measurement Display" screen.

4）、[SET] menu key

Main menu key for system setting. Go to the system setting screen of the meter

System setting can be modified from this screen

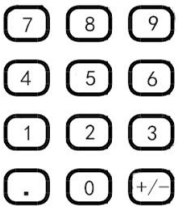

5）、Numeric key

"0～9", decimal point ".", "+/-" serve to to key in numeric values.

Further details of how to key in numeric values are available in Section 4.1

6）、[ESC]

Execute discharge operation on the measurement display screen.

7）、BACKSPACE[←]

BACKSPACE enabled when numeric values are keyed in.

8）、[LOCK]

Lock key. Press and hold for about 2 secs, then the key is locked; press and hold for another 2 secs, the key will be unlocked and the key lock indicator is unlit.

9）、 [TRIG]/Charging

Start test on the measurement display screen, i.e.: high voltage output/charging test.

2.3.3 Measurement display screen--- Homescreen (definition of display area)

Equipped with 480*272 LCD, the meter has the following screens: measurement display, measurement display zero, measurement setting, sorting setting (Bin count), internal file system, external file system, system setting.

Caution

Never attempt to touch the screen with sharp objects and fingernails,which may scratch and damage the LCD, we will be excused from the liability for such scratch and damage.

This section provides an overview of the <Measurement display> home screen, the displayed content is divided into the following display areas, as shown below.

Operation: start up, it will automatically go to <Measurement display>; press [DISP],

<Measurement display> will appear on the screen.

1、Status bar display area

This area indicates the name of current page, operation or status prompt (charging/waiting/testing/discharging state), U disk prompt and time.

As shown on the right

2、Measurement parameter display area

This area indicates the function, measurement parameter of the meter in current setting display and the duration of each test step (countdown).

Consult

Further details are available in “4.3 Measurement settting screen”

As shown on the right: these measurement parameters can be configured on “Measurement setting screen”

3、Measurement result display area

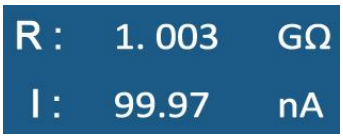

This area displays the result of each test parameter, as shown on the right

4、Measurement status display area

This area is divided into display area, warning signs and measurement state.

As shown on the right:

Bin display area: this area can display the bin sorting result during the system test (when the sorting function is enabled).

Warning signs: this area can flash some warning information, e.g.: when this area shows High Voltage, this prompts user to be aware of safety as there is high voltage output from the test terminal.

Measurement state: this area can display whether the meter test is done.

5、Function soft key display area

This area can display the function menu corresponding to the cursor area. On this screen, the following functions can be enabled by pressing the desired key in the soft key area, as shown on the upper right arrows:

- **Measurement setting** (go to the measurement setting page)

Press the desired soft key under “Measurement setting”, go to the measurement setting screen.

Consult

Further details are available in “4.3.2 Measurement setting screen”

- System setting (go to the system setting page)

Press the desired soft key under “System setting”, go to the system setting screen.

Consult

Further details are available in “4.3.3 System setting screen”

- Sorting setting (go to the sorting setting page)

Press the desired soft key under “Sorting setting”, go to the sorting setting screen.

Consult Further details are available in “4.3.4 Measurement setting screen”

- File setting (go to the internal file setting page)

Press the desired soft key under “File system”, go to the system setting screen.

Consult Further details are available in “4.3.5 File setting screen”

- U盘记录
- U disk record

Press the desired soft key under “U disk record”, save the current measurement result in U disk.

If user has not inserted any U disk, no result will be saved; if user has inserted a U disk, it can be normally used and start to save

Consult Further details are available in 2.3.2 “Key area” and 4.4 “Measurement setting screen).

2.3.4 Overview of rear panel

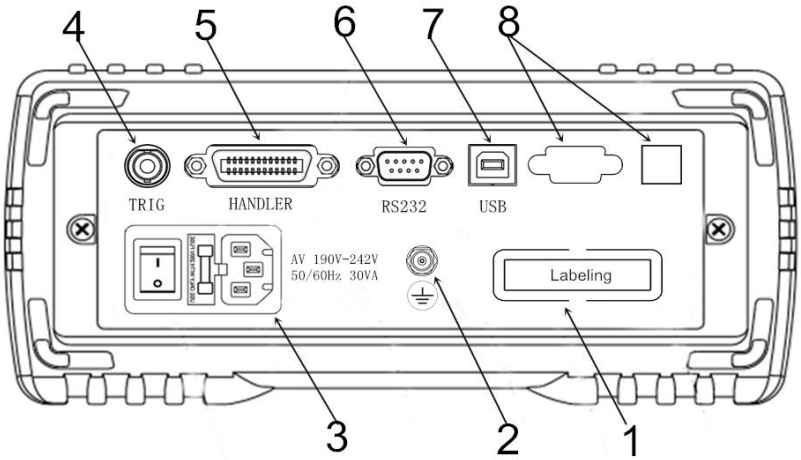

FIG.2-4 Rear panel。

1. Nameplate——this is used to indicate the model and serial no. of the meter.

2. GND pole——this GND terminal is connected to the metal enclosure of the meter to protect or shield earthing connection.

3. Power socket, fuse and power switch——Power socket is used to input AC power, with a fuse holder aside (for insertion of fuse protector).

Power switch is used to turn on or off power. When the switch position is on “I”, power ON; when the switch position is on “0”, power OFF

Consult: Further details are available in “Precautions for Use” and “3.5 Power ON and OFF”.

4、 Foot switch (TRIG) interface——Foot switch: internal TRIG and external TRIG.

If internal TRIG is enabled: foot switch can be used to charge and discharge the meter.

If external TRIG is enabled: TRIG measurement can be performed with foot switch (optional part).

5、HANDLER interface——An automatic system can be easily set up by HANDLER interface, allowing for automated test process.

The meter can output sorting compare result signal and end signal, and acquire "Start" signal via this interface.

Consult	Further details are available in "Description of HANDLER interface".

6、RS232 (or RS485) interface——connected by DB-9 cable. 232/485 serial communication enabled with the host (computer)

Consult	Further details are available in "Description of RS232, 485 interface".

7、USB interface——USB HOSTinterface is connected by square USB cable.

This is used to USB communication between the meter and the host, enabling the host-controlled CKT688.

8. Bare board——for spare use.

Do not dismantle the bare board to prevent electric shock.

2.3.5 Base bracket

The handle of the meter is adjustable, hold the sides of the handle with both hands, gently pull the sides of the box, then turn the handle.

The handle near the front part can be propped up; to adjust the handle, pull the handle outwardly, retract the handle. The handle can be adjustable to four positions, as shown below.

The handle can be dismantled and easily mounted on the frame.

Caution	Do not apply a strong force from above with the bracket erected.

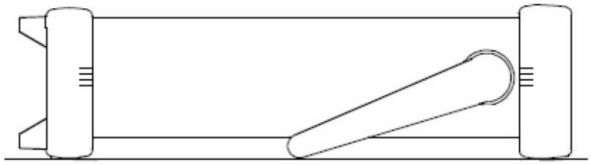

Visual position 1

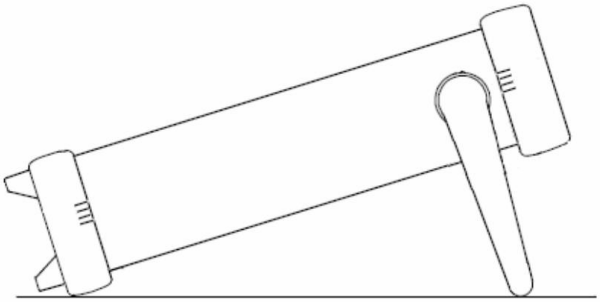

Visual position 2

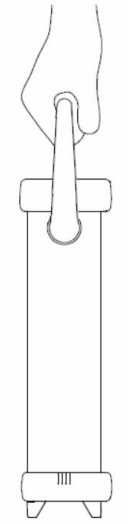

Portable position

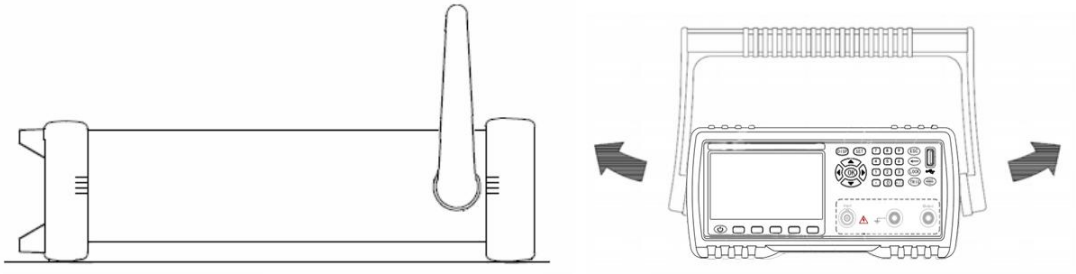

Remove handle position.(Pull to both sides until the handle the is remover.)

Chapter 3 Measurement Preps

By reading this chapter, you will learn about:

- Preparation process
- Connect powercord to test cable
- Connect to test cable
- Connection of external interface cables
- Power ON/OFF
- Parameter setting of the meter
- Zero
- Connect the DUT
- Start test

3.1 Preparation process

1. Pre-measurement check.

Prior to use, make sure that there is no malfunctioning caused by storage and transportation, and check and confirm the operation before use. If there is malfunctioning confirmed, call the retail store or Chuangkai Electronic.

Read through the prior precautions before use.

2. The general measurement procedure is described below.

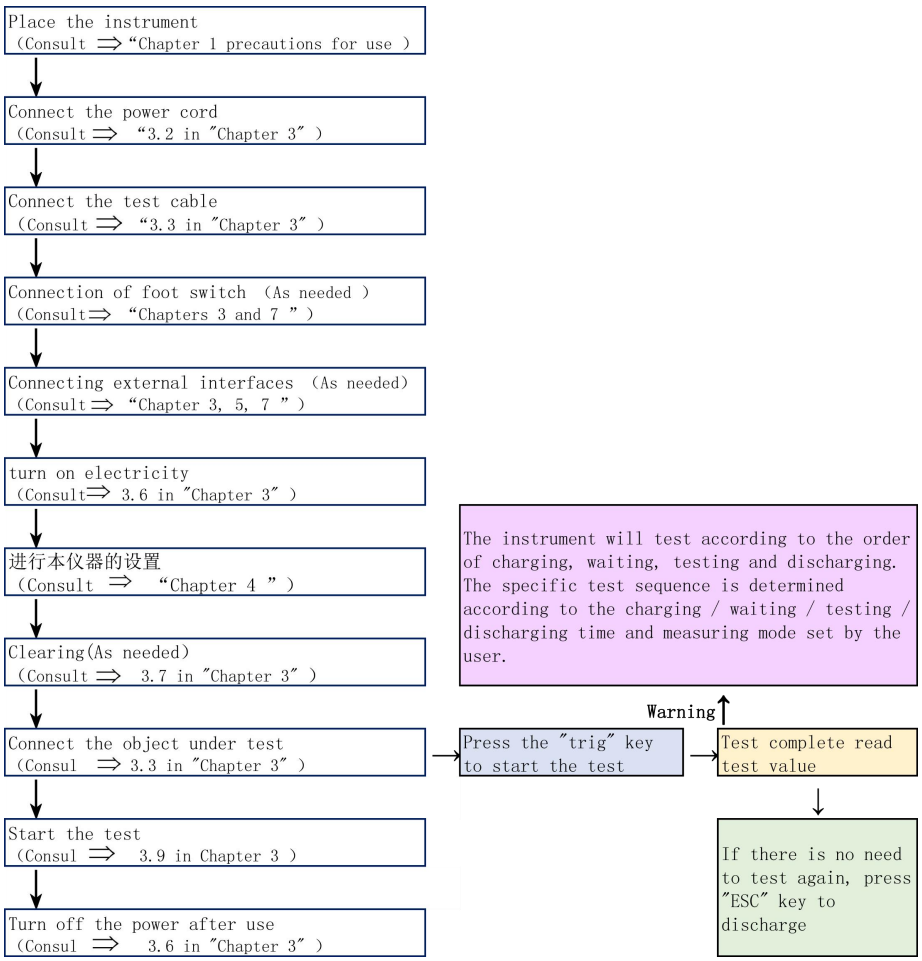

3.2 Connect power cord

1. Confirm that the power switch of this meter is OFF.

2、Confirm the mains voltage is the same as this meter and connect the power cord to the power input interface on the back.

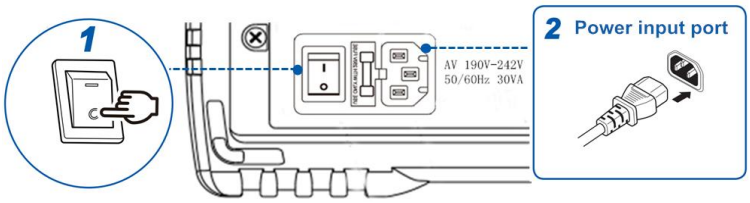

3. Insert the power cord plug into the socket.

Consult Further details are available in "Chapter 1 Precautions for Use"

3.3 Connect test cable to the DUT

1. Connect measuring probe or test clip to the measuring terminal.

Use the test cable or test class cable (optional) manufactured by our company.

Caution

- Do not apply any voltage to the measuring terminal, otherwise it may damage this meter.
- To extract out probe-type BNC connector, be sure to bend and extract out after it is unlocked.
- To prevent malfunctioning due to broken wire, do not bend or pull the joint of the probe

1）、Connect the plug of BNC test lead (Q9) to Input (current sampling terminal), connect the red test lead (red plug) to Output (voltage output terminal). Connect the black earth wire (black plug) to LD GUARD (earth terminal).

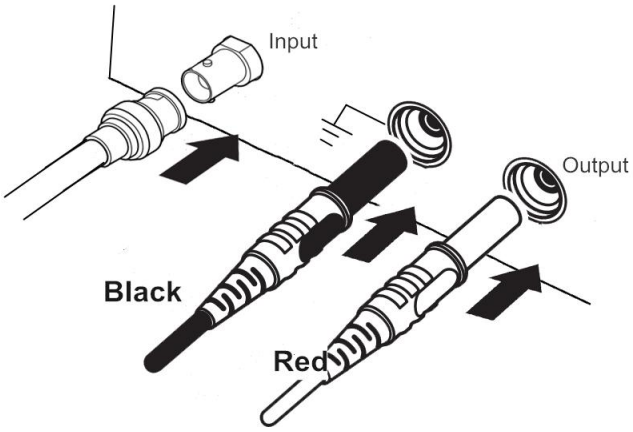

The test terminals of this meter comprise 3 terminals. Test terminals are:

Output (voltage output),

Input (current sampling terminal),

GUARD (grounding terminal).

In which: negative voltage output from Output, connected to the negative terminal of DUT.

Input connected to the positive terminal of DUT.

GUARD connected to the shielded layer of DUT.

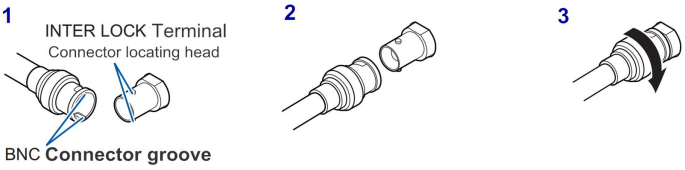

2)、 Align with and insert the groove of BNC connector to the positioning head of test terminal connector of this meter, turn right to lock the connector.

3)、 At the time of dismounting, turn left to unlock the connector, then extract it out

2. We provide optional accessories

Consult

Further details are available in “Optional accessories” as contained in “Chapter 1 Precautions for Use”

3. Connect the DUT (connection of DUT)

- How to connect (connection of DUT)

  See the example on the right

  Use the accompanying test clip to do test

  Prior to test, connect the DUT as shown on the right picture (especially polarized DUT such as capacitor). Test terminals are: Output (voltage output terminal), Input (current sampling terminal), GUARD (grounding terminal). In which, negative voltage output from Output, connect to the negative terminal of DUT. Input connected to the positive terminal of DUT. GUARD connected to the shielded layer of DUT.

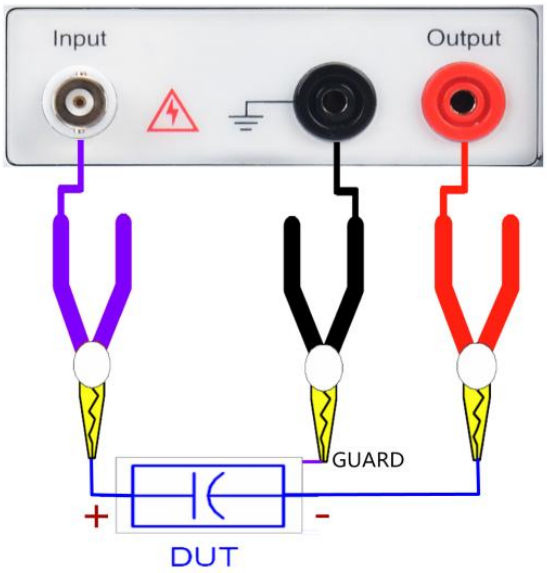

Warning

- Do not apply any voltage to the measuring terminal, otherwise it may damage this meter.
- Do not directly connect the mains to the test terminal, otherwise it may damage this meter.
- Connect polarized components (such as electrolytic capacitor) according to positive and negative electrodes, otherwise it may put personal safety under threat.
- Prior to measurement, discharge the DUT before connecting to the test terminal, otherwise it may damage the meter.

3.4 Connection of foot switch (if required)

- Before the connection of foot switch

Caution

- To prevent the meter from malfunctioning, turn off the power before connection.
- Insert foot switch reliably into the START terminal on the rear panel of the meter.
- Wipe out any stain or dirt (if any) in the interface of foot switch.

- Connect foot switch

1. Make sure that the meter is OFF.

2. Connect foot switch to "TRIG" terminal on the rear panel of the meter. Fix it securely, as shown in the example below.

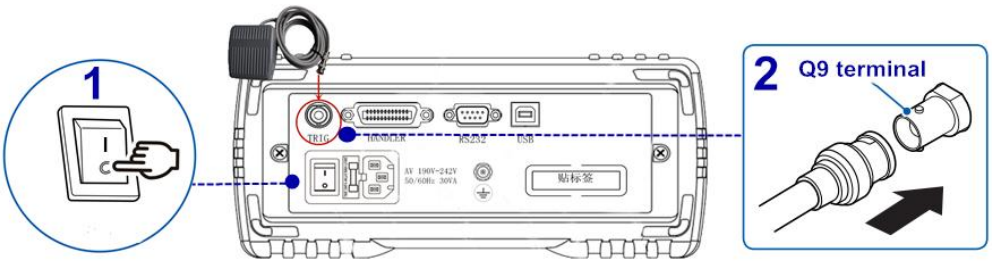

- To use foot switch

Consult

Further details are available in "Use of foot switch" as contained in "Chapter 7 Remote control"

3.5 Connection of external interface cables

1. Connection of RS232 communication cable (if required)

Consult

Further details are available in "Chapter 7 Remote control"

2. Connection of USB communication cable (if required)

Consult

Further details are available in "Chapter 7 Remote control"

3. Connection of HANDLER (if required)

Consult

Further details are available in "Chapter 7 Remote control"

4、 U disk storage (if required)

If user needs to store test data in U disk, insert U disk to USB DEVICE interface on the front panel of the meter, only USB2.0 is supported currently.

Consult

Further details are available in "5.2 File system specification"

3.6 Power ON/OFF

1、Boot: the button marked on the upper left part of the rear panel (see the picture on the right) is power switch.

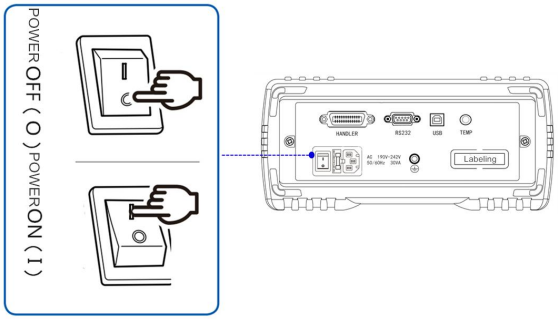

When the switch position is on "I", power ON When the switch position is on "0", power OFF

2、Standby button: in the lower part of the LCD screen on the front panel

When the meter is in the standby state, the standby button shows red. At this point, press standby button, the meter will switch to work and the standby button shows green. At this point, press and hold standby button, switch to standby state. In the standby state, if you need to switch off the power, turn off the power switch in the rear part of the box if needed.

Start sequence: turn on the power switch, the meter will automatically self-check.

- The screen turns brighter
- Display the boot screen, company name, model and version;
- Self-check of the meter.

3、Boot default: After the self-check procedure is done, the last setting before shutdown will be displayed.

In the initial use, the initial setting will be displayed. Refer to "Parameter setting of the meter" if needed.

4、Warm-up time: To attain the specified accuracy, warm-up for at least 15 mins after the meter is turned ON.

5、Power OFF: press the power switch on the rear panel of the meter, the switch position is on "0", "as shown above"

The meter is automatically shut down if the power cord is unplugged from the power input.

Turn on the power again, the meter will start according to the pre-OFF setting.

Warning

Do not switch ON and OFF the meter quickly and continuously (or frequently), transient impact may reduce the service life of the meter, or even damage the meter.

Caution

- In power ON, when the mains is disconnected and connected later, the meter can start even you don't press the power switch button.
- For normal measurement, do not flip the clip at will.
- Warm-up for 15 minutes after booting, connect test clip, open and zero the test clip before starting the measurement.

3.7 Parameter setting of the meter

Consult Further details are available in “Chapter 4 Parameter setting”

3.8 0 ADJ

The meter can be opened and zero if needed.

How toset zero:

1. Extract or suspend the test clips of Input and Voltage Output before starting to zero.

2. Go to the zero screen for zero

Caution

- Before opening the zero screen, make sure that the test Input is suspended
- Extract or suspend the test lead on Input, never contact it with any object.

Operation: on the home screen of measurement display: press <Measurement setting> screen, press <Arrow> keys to move the cursor to < Open-circuit zero>, the soft key area on screen will show as OFF, ON. Press the corresponding <Function soft key> to select the desired zero operation, modify the zero status.

There are two zero functions: ON, OFF. When zero is ON, clear the current base in test loop.

- ON: turn on Open-circuit zeroing. Execute Open-circuit zeroing on the meter. At this point, the measurement zeroscreen will automatically pop up, as shown on the right; when the progress bar comes to an end, the zero process is done.

Under the automatic range, all ranges will be zero.

Under the manually selected fixed range, only current range is zero.

If the zero process is done, the zero data will be stored in the non-volatile memory.

Tip If user executes Open-circuit zeroing of the meter successfully, the zero based used in the meter is the base obtained by this Open-circuit zeroing.

Caution If user needs to execute Open-circuit zeroing, the conditions as described in “Use environment”, Chapter 1 must be satisfied, all test leads on the test terminal must be extracted out, and the meter should be warmed up for more than 15 mins, otherwise the zero base will be inaccurate and the accuracy of test results will be undermined.

● OFF: turn off the Open-circuit zeroing of the meter.

3、After the zero is done, the meter will automatically return to the test state.

Consult

Further details are available in “4.3.2 Measurement setting screen”

3.9 Start test

1. How to test

Prior to test, connect the DUT by this way (especially polarized DUTs such as capacitors).

Consult

Further details are available in “3.3 Connect test cable”

Caution

- There is voltage output at the Output terminal, connect the DUT in the discharge state to guard against electric shock hazards.
- Connect polarized DUT (electrolytic capacitors) to positive and negative terminals properly as shown in the picture, otherwise it may cause the explosion of components. And extract out after a few seconds of discharge to guard against electric shock hazards.
- The meter cannot be shorted for a long time, otherwise the meter may be damaged.
- Make sure that the clip plug is the same as marked on the panel interface, otherwise it may cause abnormality of measurement.
- For accuracy and stability of measurement, make sure that the test environment meets the environment conditions as described in the Preface.

2. Operation process

1) Press TRIG key, go to the test state.

2) Press ESC, return to the discharge state after the test is done.

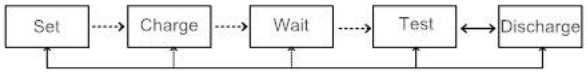

The particular process is shown on the right:

In which, charging, waiting and testing are shown with high voltage icons, but high voltage icon disappears when discharging. In case of charging, waiting and discharging (when the discharge time is set to 0s, the system will switch from testing state to discharging state only if ESC is pressed)

- **Charging state:**

Press TRIG, the meter will go to the charging state. There is voltage output from the voltage Output, the charging timer will start up. After the charging time comes to an end, go to the waiting state.

- Waiting state:

After the charging state comes to an end, go to the waiting state. At this point, the meter will wait for some time, then go to the testing state. After the waiting state comes to an end, go to the testing state.

- Testing state:

In the testing state, execute tests on the DUT resistance and current. Then go to the discharging state

- Discharging tate:

In the discharging state, the meter can discharge the residual charges by internal circuit.

Warning

- When the DUT contains any capacitance component, if an ulation test is executed, this capacitance component may be rged as the test voltage charge, resulting in an electric shock ident.

After the test is done, execute discharging operation by the following steps:

1) End the test with the test leads still connected to the DUT.
2) Automatically discharge residual charges on the DUT inside the meter.
3) In the period of discharging, the yellow high voltage icon will disappear.

Caution

For safety concern, wait until the meter test is done, go to the parameter setting of other programs.

3. Selection of ranges

7 measuring ranges are available in CKT688, which comprise 7 range segments 100uA, 10uA, 1uA, 100nA, 10nA, 1nA, 0.1nA.

When the measuring range of this meter is set to Auto, the meter will select the best input resistance applicable to different resistances under test, in order to attain the desired test result.

Tip

- Manual range can lead to higher test speed
- Under automatic range, some devices (e.g.: CBB capacitors) cannot select an appropriate range, this is a normal case. Switching to manualrange test will avoid this from happening.
- To measure leakage current, it is recommended to use manual range.

4. Illustrated examples

If a customer intends to test a batch of metallized film capacitors, mode: CBB-250V-2.2μF, with insulation resistance R> 100GΩ.

Test procedure:

1) Plug in three-wire plug to make sure that the power earth wire can be reliably connected, press the power switch on the front panel, the meter will be turned on and the boot screen will be displayed, warm up for 15 mins before starting the test;

2) The meter goes to the measurement screen, set all parameters on the measurement screen page.

3) Output voltage is set to 250V;

Charging time is selected according to T=KCU (select K=5000, C=2.2μF, U=250V; then we have T=5000×2.2×250=2.75 s, select charging time as 3s);

Measuring time is set to 0s (or as required);

Measuring speed is set to slow;

Measuring range is set to AUTO or fixed to 20nA (250/100G=2.5n A);

Open-circuit zeroing is set to OFF; (execute Open-circuit zeroing once before starting the test to clear the stray base);

Measurement mode is set to continuous;

Waiting time is set to 0s;

Discharging time is set to 0s (since the internal discharge power is limited, if the capacitor has a large capacity, it is recommended to discharge outside the meter);

4) Connect measuring leads to start the test;

5) Press discharge key during the test, end the test.

Chapter 4 Setting of Measurement Parameters (Basic Setting)

By reading this chapter, you will learn about:

- Confirmation of DUT
- Parameter setting and numeric input method
- Introduction to measurement setting screen and parameter setting

4.1 Confirmation of DUT

Continuous and single insulation resistance measurements are supported by this meter. Please select an appropriate measurement method for the DUT.

1. Influence of capacitive load:

This meter is conditioned on pure resistance, but the DUT contains capacitive component to a certain level, there is some influence when capacitive loads are connected. In general, the higher resistance (the smaller detection current”) leads to the greater deviation.

Charging current of this meter＜10mA, subject to the influence of internal resistance, this current is not constant. In case of low voltage, the current is relatively small.

Connecting capacitive loads such as capacitor will influence the rising time of output voltage. This time is calculated according to the following equation:

CV=it 【C: Capacitance (F); V: Voltage (V); i: Current (A); t: Time (s)】

e.g.: When the test voltage of 500V is applied on 1.0uFcapacitor, the pressure rise time to 500V from the start of test is 0.5s:

1.0uF╳500V/1mA=0.5s

Details

- If the DUT contains capacitance component, set an adequately long test time.
- If the electrostatic capacity contained in the DUT is larger, the deviation of the measured values is inclined to increase; in addition, it also takes some time to rise the output voltage.

2. Influence of cable length:

When used on the production line or automated equipment, user may need to increase the length of test cables. If the test cable is increased, it may be vulnerable to the influence of coupling capacitance between cables or line noise.

Notes to wiring of test cables ——to reduce the influence of noise on measured values, be aware of:

- Increase the distance with noise source and power cable; a certain distance should be also kept between different types of signal lines, power cables and signal lines, between input and output lines, and between earth wire and signal line.

- The noise influence can be reduced by placing test cables against the metal earth wire.

- To increase the cable length, it may be vulnerable to the noise of power cable. When wiring, keep away from the power cable.

- In wiring, keep away from the noise sources (e.g.: motors, welders, inverters).

Notes to shielding of test cable——take measures to shield test cables, connect the shielded wire to the GND terminal on the back of this meter, guide the incoming noise to GND.

3. About noise influence:

Noise sources: the electrical interference in electronic circuits or devices is referred to as "noise". For manufacturers, noise sources include motors, welders and inverters. Noise is generated from communication lines, power cables and earth wires and other noise sources, and generated by induction (electrostatic induction, electromagnetic induction), frequency band: wide band. There are also impulsive noises such as surges. Power noise coming out of power frequency is also included here. These noises may influence the measured value.

Caution

The following circumstances may influence the output value, you may need to be aware of:

- When the test cable is near the noise sources,
- When the test cable and noise source shares the power source:

Caution

- The measured resistance of certain DUTs may decrease over time. (e.g.: when the ground-to-ground capacity is large)
- Appropriate test time is failed to set, which may lead to misjudgment. As a result, carefuly confirm the time when the measured value stabilizes and set the test time accordingly.
- In case of capacitive load, it may take some time to rise the output voltage.
- If the electrostatic capacity of the test object is higher than 1uF, it takes some time to charge, so the automatic function may not work normally.
- During high-speed test (e.g.: the test duration is shorter than 100ms), user may not catch up with the display update of the voltage monitor. If user needs to confirm the output voltage, use a high voltage probe and confirm the waveform on oscilloscope.

Details

- Under automatic range, some devices (e.g.: CBB capacitors) cannot select an appropriate range, this is a normal case. Switching to manualrange test will avoid this from happening.
- The measured value may become unstable due to humidity and other environmental impacts. Confirm the time when the measured value stabilizes and set the test time accordingly.
- The time when theultra-high impedance test stabilizes may vary greatly due to material reason. Some materials require a longer time for stabilization and some waiting time.

4.2 Parameter setting and numeric value input method

Caution

User-defined parameters and data will be automatically saved.

1. Parameter setting

Step 1: press <Arrow> keys to move the cursor to the menu bar where value needs to configure, then select the desired parameter and press <OK> "OK" or press encoder, the cursor will change from green to red.

Step 2:press the corresponding <Function soft key> in the lower part of the screen, select the desired parameter at the bottom of the screen, set done.

2. Numeric input

Step 1:press <Arrow> keys to move the cursor to the menu bar where value needs to configure; press any <Numeric> key, the cursor will change from green to red. At this point, go to the numeric setting state.

Step 2:Press the numeric keys <0～9>, decimal point <./,> keys and positive and negative sign <+/-> key to complete the numeric input, press the <Function soft key> in the lower part of the screen, select the desired unit for setting value; press <Backspace> "←" to delete the last input character.

Step 3:press the corresponding <Function soft key> in the lower part of the screen, select the parameter (e.g.: unit) as displayed in the <Soft key> area in the lower part of the screen or press <OK> "OK", set done.

4.3 Introduction to measurement setting screen and parameter setting

Operation: 2 options are available to go to the measurement setting page.

- After booting, automatically go to the measurement display screen,

  Press the corresponding soft key under "Measurement setting" in the lower part of the screen, go to the measurement setting screen.

Keys as shown in the right arrow:

● Or alternatively, press DISP [DISP] menu key in the right part of the screen, <Measurement setting> will also be displayed on the screen.

On the measurement setting screen, user can configure output voltage, measurement mode, charging time, waiting time, measurement time, discharging time, measurement speed, measuring range, zero, average cycles of the meter. As shown in FIG.4-1

FIG.4-1 Measurement setting screen

1. Status bar display area

This area indicates the name of current page, USB disk prompt, and time.

2、Description of parameter setting on the measurement setting screen:

This area indicates the configurable test parameters of this meter.

As shown on the right: configurable test parameters of this mete include: output voltage, measurement mode, charging time, waiting time, measurement time, discharging time, measurement speed, measuring range, zero, average cycles.

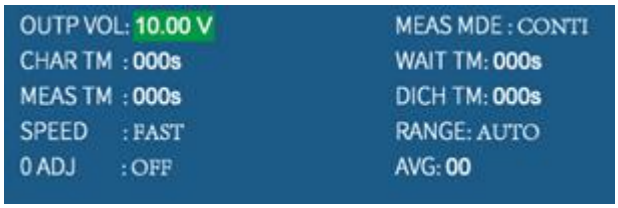

1) Input voltage——For setting of voltage on the OUTPUT terminal.

Operation: 2 input methods are supported.

Option 1: press arrow keys to move the cursor to output voltage, press any numeric key; enter the numeric value of the desired test voltage, press “OK”, the cursor will change from red to green. At this point, set done.

Option 2: press arrow keys to move the cursor to output voltage, press the desired function soft key to add or subtract numeric values, enter the desired test voltage.

As Arranged	● ↑↑ (+ +) Press this function soft key, the meter quickly increases the setting value, with a step size of 10. ● ↑ (+) Press this function soft key, the meter increases the setting value, with a step size of 1. ● ↓ (-) Press this function soft key, the meter decreases the setting value, with a step size of 1. ● ↓↓ (- -) Press this function soft key, the meter quickly decreases the setting value, with a step size of 10.

● ↑↑ (+ +)

This key is a coarse tuning key to increase output voltage (setting value), whenever this key is pressed, the voltage will increase in the order of common voltage points. A few of common default voltage points for this meter are: 1V, 10V, 25V, 50V, 75V, 100V, 125V, 150V,200V,250V,500V,750V,1000V.

● ↑ (+)

This key is a fine tuning key to increase output voltage (setting value), whenever this key is pressed, the voltage will increase by 1V.

● ↓ (-)

This key is a fine tuning key to decrease output voltage (setting value), whenever this key is pressed, the voltage will decrease by 1V.

● ↓↓ (- -)

This key is a fine tuning key to decrease output voltage (setting value), the voltage will decrease in the order of common voltage points. A few of common default voltage points for this meter are: 1V, 10V, 25V, 50V, 75V, 100V, 125V, 150V,200V,250V, 500V,750V,1000V.

Setting range: CKT688 can be configured within 0.5-1000V.

2) **Measurement mode**——for setting of measurement mode

Operation: press arrow keys to move the cursor to measurement mode, press the corresponding function soft key, the soft key area on screen will show as single or continuous. Select the desired measurement mode.

Measurement mode: single, conti

Single: set the measurement mode of this meter as single. Only manual TRIG and external TRIG are active. In case of internal TRIG, when the single test mode is selected, TRIG source is automatically selected as manual TRIG. In case of single mode, if a single test is trigged, the meter will be tested in the order of charging-testing-discharging, user

doesn’ t need to manually switch on and off the voltage.

CONTI:set the measurement mode of this meter as continuous. The meter will automatically work in the order of charging-waiting-testing-discharging.

3） CHAR TM(Charging time)——for setup of charging time of the meter.

Operation: 2 input methods are available.

Option 1: press arrow keys to move the cursor to charging time, press any numeric key; enter the numeric value of the desired charging time, press “OK”, the cursor will change from red to green. At this point, set done.

Option 2: press arrow keys to move the cursor to charging time, press the desired function soft key to add or subtract numeric values, enter the desired charging time.

CKT688 has a built-in charging timer of 999 seconds.

Tip	If the charging time is set to “0S”, the charging timer will be turned OFF.

4) Wait TM(wait time)——for setup of waiting time of the meter.

Operation: following the same procedure as charging time. Just press arrow keys to move the cursor to waiting time.

5) MEAS TM(Measurement time)——for setting of measurement time of the meter.

Operation: following the same procedure as charging time. Just press arrow keys to move the cursor to measurement time.

6） DICH TM(Discharging time)——set the discharging time of the meter.

Operation:following the same procedure as charging time. Just press arrow keys to move the cursor to discharge time.

7) SPEED(Measurement speed)——for setting of measurement speed of this meter

Operation: press arrow keys to move the cursor to measurement speed, press the corresponding function soft key, the soft key area on screen will show as fast or slow. Select the desired measurement speed.

Sampling rate refers to the number of samples completed per second.

Two sampling rates are available for choice: fast: 12 times/sec; slow: 5 times/sec.

Sampling rate refers to the number of samples completed per second.

The test with CKT688 depends on several factors:

(1) Integration sampling cycle (integration sampling cycle≈ 40ms) (2). Average cycles (3). The time when the measured result is displayed

Tip	Setting average time will lead to improved sampling stability, but reduce the test speed.

8) RANGE(Setting of range)——for selection of automatic or locked range

Operation: press arrow keys to move the cursor to “Setting of range”, press the corresponding function soft key, the soft key area on screen will show as Auto, 0.2nA,

2nA, 20nA, Next page,200nA, 2uA, 20uA, 200uA, Next page. Select the desired setting of range.

In which 0.2nA, 2nA, 20nA, 200nA, 2uA, 20uA,or 200uA is fixed range.Under automatic state, the meter range will be Auto, the meter will automatically select an appropriate range for measurement.

Tip

Under auto range, the meter will automatically select an appropriate range for measurement, but it takes a long time for selection of range, so it is not suitable for batch test. And it is not easy to select an appropriate range when a large capacitive load is tested. For batch test of similar products, it is recommended to test within a locked range, which can significantly improve the test efficiency.

If a fixed range is selected and one range of the meter is displayed, the meter will jump to this range for measurement.

- 0.2nA: measuring range locked to 0.2nA
- 2nA: measuring range locked to 2nA
- 20nA: measuring range locked to 20nA
- 200nA: measuring range locked to 200nA
- 2uA: measuring range locked to 0.2uA
- 20uA: measuring range locked to 20uA
- 200uA: measuring range locked to 200uA

Caution

It takes some time to switch between measuring ranges under auto range. If a shorter test time is set, the test may come to an end without showing the measured value. If the auto range time is used, confirm the time when the measured value stabilizes and set the test time accordingly.

Details

- To change the measuring range, if the resistance value of the DUT is obviously smaller than the measuring range, the error will increase.
- Under auto range, if the meter cannot select range properly, execute zero calibration.
- Further details about the zero operation is available in “3.7 Zero”

Tip

- Test speed can be improved under manual range.

9）**0 ADJ(Open-circuit zero)**——for setting of open-circuit zero of the meter

Caution

- Before turning on zero, make sure that the test input terminal is suspended
- Whenever you turn on the zero button, CKT688 will execute full-range zero.

Operation: press arrow keys to move the cursor to "Open-circuit zero", the soft key area on screen will show as OFF, ON. Press the corresponding function soft key, select the desired zero operation.

Two zero functions are available for choice: ON, OFF. When turned ON, clear the base in test loop.

OFF: turn off the Open-circuit zero of the meter.

ON: execute open-circuit zero operation of the meter. At this point, the meter will automatically jump to the measurement screen, as shown in FIG.4-3: when the progress bar is about to end, the zero operation is done. If the open-circuit zero is done, the open-circuit zero status will turn ON.

FIG.4-3 Measurement zero screen

Consult

Further details are available in 3.8 "Zero"

10) **AVG(Average)**——For setting of average test cycles of the meter.

Operation: 2 input methods are available for choice.

Option 1: press arrow keys to move the cursor to average, press any numeric key; enter the numeric value of the desired average cycles, press "OK", the cursor will change from red to green. At this point, set done.

Option 2: press arrow keys to move the cursor to average, press the desired function soft key to add or subtract numeric values, enter the desired average cycles.

Set range:0-999.

According to the user-defined average cycles, smooth the test data. Because the test current corresponding to the insulation resistance is quite weak, it may be vulnerable to data fluctuations due to interference of various factors, averaging operation will lead to relatively stable test result and bring it closer to the real test result.

Details	In caes of external TRIG, the average function will not work whether turned ON or OFF.
Tip	Setting average cycles can improve the sampling stability, but this may reduce test speed.

Chapter 5 System Setting and File Management

By reading this chapter, you will learn about:

- Introduction to system setting screen and parameter setting
- Introduction to file system screen and parameter setting
- Description of file system (memory/recall function)

5.1 System setting screen

On the measurement display screen, press soft key in the lower part of "System setting", go to the system setting screen.

Or alternatively, directly press [SET] menu key, <System Settings>will also be displayed on the screen, as shown in FIG.5-1:

FIG.5-1 System setting screen

1. Status bar display area

This area indicates the name, U disk prompt and time of current page.

As shown on the right:

2. Parameter setting on the system setting screen is described below:

On the system setting screen, you can set the system alarm, bus mode, communication protocol, system language, TRIG source, zoom in, TRIG edge, key tone, baud rate, bus address of the meter.

1) RING(System ring)——For selection of alarm mode

Operation:press arrow keys to move the cursor to system alarm, press the function soft key in the lower part, the soft key area on screen will show as PASS, FAIL, OFF. Select the desired system alarm.

OFF: the buzzer will not be heard no matter what the test result will be.

PASS: the buzzer will be heard when the test result is passed

FAIL: the buzzer will be heard when the test result is failed

2) **Bus mode——Select** RS232 or USB interface for remote control

Operation:press arrow keys to move the cursor to bus mode, press the function soft key in the lower part, the soft key area on screen will show as RS232, USB. Select the desired bus mode.

The meter will perform remote operation and control through two interfaces

3) **PROT(Communication protocol)——Select communication protocol mode of the bus**

Operation:press arrow keys to move the cursor to communication protocol, press the function soft key in the lower part, the soft key area on screen will show as Normal, Modbus. Select the desired communication protocol mode.

Consult	Further details are available in 7.2 “Communication protocol”

4) **LANG(System language)**——For selection of language mode of the meter screen

Operation: press arrow keys to move the cursor to communication protocol, press the function soft key in the lower part, the soft key area on screen will show as Normal, Modbus. Select the desired communication protocol mode.

5) **TRIG(TRIG source)**——For selection of TRIG source for starting measurement

Operation: press arrow keys to move the cursor to TRIG source, press the function soft key in the lower part, the soft key area on screen will show as internal and external. Select the desired communication protocol mode.

If internal TRIG is selected: press TRIG (or foot switch) on the panel, the meter will start the test, press ESC (or foot switch) to stop the test.

If external TRIG is selected: the meter will start a test cycle after the receipt of start signal transmitted from HANDLER interface (or foot switch TRIG), USB, RS232. If the second start signal is received within a test cycle, it will be deemed as inactive and neglected.

6) **BOOST(Zoom in)** - Select the font size as displayed in test result

Operation: press arrow keys to move the cursor to zoom in, press the function soft key in the lower part, the soft key area on screen will show as OFF or ON. Select the desired zoom in.

If selected as OFF: the test result can be displayed as normal font size.

If selected as ON: the test result can be displayed as large font size for ease of user observation.

7) **EDGE(TRIG edge)**-If external TRIG is selected, trigged from the rising edge or falling edge of TRIG signal

Operation: press arrow keys to move the cursor to TRIG edge, press the function soft key in the lower part, the soft key area on screen will show as falling edge

or rising edge. Select the desired TRIG edge.

If rising edge is selected, the meter will start the test if the rising edge of TRIG signal is detected, vice versa.

8) Key tone——Select the prompt tone when keys are pressed

Operation: press arrow keys to move the cursor to key tone, press the function soft key in the lower part, the soft key area on screen will show as ON or OFF. Select the desired key tone.

If selected as ON: the buzzer will be heard if a key is pressed, prompting that the key has been pressed.

If selected as OFF: the buzzer will not be heard if a key is pressed.

9) Baud rate——Select the communication rate of the meter, 3 groups of baud rates are provided as options

Operation:press arrow keys to move the cursor to baud rate, press the function soft key in the lower part, the soft key area on screen will show as9600,19200, 38400. Select the desired baud rate.

10) ADDRESS(Bus address)——Select the address of the meter in bus

Operation: press arrow keys to move the cursor to bus address, press the function soft key in the lower part, add or subtract numeric values, enter the desired bus address.

Range of bus address: 00-99

When 485 interface or MODBUS protocol is used in the meter and multiple meteres are simultaneously connected to bus, identified according to different bus addresses. Only when the bus address in the transmitted command is the same as local address, the meter will only accept the command.

11) System time——Set the correct time in local time zone of the system; automatically saved after the setting is done.

e.g.: 8:15:25 on 13 May 2019, as shown in the format: 19-05-13 08: 15: 25

Operation: press arrow keys to move the cursor to system time, then move the cursor to the desired time, press the function soft key in the lower part, add or subtract numeric values, enter the desired system time.

5.2 File system screen

On the measurement display screen, press the corresponding soft key in the lower part of “File system”, go to the file system screen.

2 kinds of file systems are available: internal file system, external file system. Two file systems can be switched each other.

Operation: on the measurement display screen, press he corresponding soft key in the lower part of “File system”, go to the file system screen. Press arrow keys to move

the cursor to “Internal file” or “External file”, then press the corresponding function key in the lower part, the soft key area on screen will show as Internal, External, Exit.

Select the desired file screen.

See FIG5-2: internal, external file system screen

FIG.5-2 Internal, external file system

If the desired function soft key in the lower part of “Internal” is pressed: the internal file system will pop on the current page;

If the desired function soft key in the lower part of “External” is pressed: the external file system will pop on the current page;

If the desired function soft key in the lower part of “Exit” is pressed: the file system will exit, return to the measurement display screen.

1. Status bar display area

This area indicates the name, U disk prompt and time of current page.

As shown on the right:

2. The parameter setting of the internal file system is described below:

CKT688 series can save the user-defined parameters in the file form into the non-volatile memory as an internal component of the meter. If the same setting is used next time, user doesn’t have to reset these parameters, the last parameter setting can be obtained by just loading the corresponding file. Refer to FIG.5-3 “Internal file system”

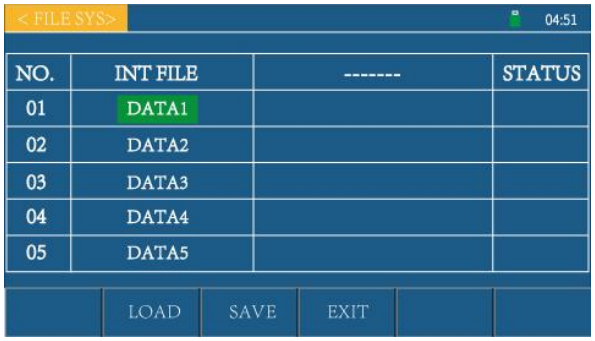

FIG.5-3 Internal file system

The information about 5 files can be displayed on the internal file page, including file name and file status.

Operation: on the internal file system screen, move the cursor to the desired file

name, then the soft key area on screen will show as load, save or exit. Select the desired function, press the corresponding function soft key.

1) Load

Select a file, then press the corresponding function soft key under "Load", the status bar will show whether the file is loaded successfully.

2) Save

Select a file, then press the corresponding function soft key under "Save", the status bar will show whether the file is saved successfully.

Caution

If a file already exists in the file serial position for file storage, then save execution will make the original file overwritten.

3) Exit

If the corresponding function soft key under "Exit" is pressed: the file system will exit on current page, return to the measurement display screen.

For information about the memory/recall function of CKT688, refer to Section 5.3.

Consult

Further details are available in "5.3 Description of file system"

3. The parameter setting of the external file system is described below:

CKT688 series can save the information into the U disk. If the same setting is used next time or on other meter of the same type, user doesn't have to reset these parameters, the last parameter setting can be obtained by just loading the corresponding file.

Refer to FIG.5-4 "External file system"

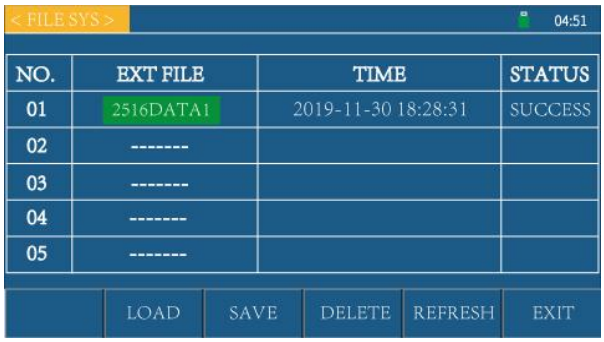

FIG.5-3 External file system

The information about 5 files can be displayed on the external file page, including file name and file storage time, status.

Operation: on the external file system screen, press arrow keys to move the cursor to the file name to be edited, then the soft key area on screen will show as load, save, delete, refresh, or exit. Select the desired function, press the corresponding function soft key.

1) Load

Select a file, then press the corresponding function soft key under “Load” to import the parameter setting stored in U disk into the meter.

2) Store

Select a file, then press the corresponding function soft key under “Save” to save the measured result in U disk

3) Delete

Select a file, then press the corresponding function soft key under “Delete”,

4) Refresh

Select a file, then press the corresponding function soft key under “Refresh”,

5) Exit

If the corresponding function soft key under “Exit” is pressed: the file system will exit on the current page, return to the measurement display screen.

Consult

Further details are available in “5.3 Description of file system”.

5.3 Description of file system (file types to be stored or recalled/save test data)

1. Introduction to file types to be stored/recalled

Current measurement conditions for saving/recalling. Up to 5 groups of measurement conditions can be saved. By memory/recall function, user can save configuration information to internal Flash or external U disk of CKT688, or recall such information from internal Flash or external U disk of CKT688.

Available saving options and intended uses are listed below:

Storage Method		Whether Callable	Intended Use
Type	File Format		
Save configuration (internal Flash)	DATA1-5	Y	Save configuration status to internal Flash.
Save configuration (external U disk)	688DATA1-5	Y	Save configuration status to U disk.
Save data (external U disk)	CKT688.XLS	N	Save measured results to U disk.

Be aware of the following points when U disk is used on CKT688:

1. Use a U disk with USB2.0 interface.
2. The U disk file system should be FAT16 or FAT32, formatted with FAT16 or FAT32 standard; for a USB disk with memory over 512M, it is recommended that user should format with FAT32 standard.
3. Before connecting U disk to CKT688, it is recommended that user should back up the data stored on U disk. We will not be responsible for any data loss in the USB memory when USB memory is used along with CKT688/B.
4. For efficient storage of data to U disk, it is recommended that there should not be too many files or folders in the U disk.

Caution

2. Operation procedure to save test data to U disk

1）、Insert a USB disk, wait until the meter can recognize the U disk (about 5-10S). If U disk is recognized, the status bar will show a USB prompt.

2）、On the home screen (measurement display screen), press “U disk record” in the soft key area on screen to control the switch of U disk record. If the U disk record function is ON, U disk prompt will turn from red to green.

3）、 U disk status prompt

When the U disk icon is green, it means that the meter is writing data to U disk;

When the U disk icon is red, it means that the U disk has been connected, but the meter doesn’t write any data to U disk;

When there is no U disk icon, it means that the U disk has not been inserted.

4）、Make software upgrade with U disk.

Warning

Use our upgrade software under the instruction of technician, otherwise it may cause malfunctioning or accident.

Chapter 6 Sorting Comparator

By reading this chapter, you will learn about:

- Introduction to sorting screen and parameter setting
- Alarm
- PASS/FALL indicator
- Sorting process

6.1 Sorting screen

On the measurement display screen, press the intended soft key below "Sorting settings", go to the sorting setting screen:

FIG.6-1 Sorting setting screen

1. Status bar display area

This area indicates the name of current screen, U disk prompt and time.

As shown on the right:

2. The parameter setting of the sorting setting screen is described below:

The comparator function of meter can be set on this screen. CKT688 can set the limits of 3 groups of main parameters.

Sorting limits, sorting items, sorting Bins and upper and lower limits of each Bin of this meter can be set on the sorting setting screen.

1) PICK LIVA(Sorting limits) - For selection of sorting function of this meter

Operation: press arrow keys to move the cursor to the sorting limits, the soft key area on sreen will show as OFF or ON. Press function soft key in the lower part of the screen, select the desired sorting limits.

Caution

1. When the sorting limits of the meter is OFF, if the sorting item is resistance sorting, then the upper limits of Bin 1, 2, 3 will be set to infinitely great, become unmodifiable, and will not be included in the comparison. At this point, interval sorting is changed to single-point sorting, the test value will be judged as Passed as long as it is greater than the lower limit of this Bin;
2. If the sorting item is current sorting, then the upper limits of Bin 1, 2, 3 will be set to 0, become unmodifiable, and will not be included in the comparison. At this point, interval sorting is changed to single-point sorting, the test value of current will be judged as Passed as long as it is greater than the upper limit of this Bin;
3. When the sorting limits of this meter are set ON, either resistance sorting or current sorting is carried out according to the operation procedure of limits as described above.
4. Whether the sorting limits are set ON or OFF, the priority of Bin 1, 2, 3 is the same.

The following functions are enabled under the precondition that the sorting limits are set ON.

2) **Pick item** -Resistance sorting or current sorting is provided as options.

Operation: press arrow keys to move the cursor to the sorting limits, the soft key area on sreen will show as resistance or current. Press function soft key in the lower part of the screen, select the desired sorting limits.

When resistance sorting is selected, the meter will compare the test value of resistance with the upper and lower limits to output the result of sorting comparison.

This also applies when current sorting is selected.

3) Pick Bins—For selection of sorting Bins, three Bins are provided as options.

Operation: press arrow keys to move the cursor to the sorting Bins, the soft key area on screen will show as Bin 1, 2, 3. Press the function soft key in the lower part, select the desired sorting Bins. The selected Bin should correspond to the table on the sorting screen.

When resistance sorting is selected, the meter will compare the test value of resistance with the upper and lower limits to output the result of sorting comparison.

This also applies when current sorting is selected.

Sorting Bin can be selected as Bin 1, 2, 3 if required, corresponding to the Bin of DUT conformity, i.e.: Grade 1, 2, 3 product.

- **Bin “1, 2, 3” of the upper and lower limits**

1) When “Sorting items” is selected as “resistance”:

Operation: on the sorting setting screen, select “resistance” in the “sorting items”; press arrow keys to move the curser to “1”, or “2”, or “3” column below the “upper limit” or “lower limit” column, press the “numeric” key on the right to directly set the resistance value, press the function soft key in the lower part of the soft key area on screen; to select resistance unit, the cursor will turn green once the unit is selected, now the setting is done.

2) When “Sorting items” is selected as “current”:

Operation: on the sorting setting screen select “current” in the “sorting items”; press arrow keys to move the curser to “1”, or “2”, or “3” column below the “upper limit” or “lower limit” column, press the “numeric” key on the right to directly set the resistance value, press the function soft key in the lower part of the soft key area on screen; to select current unit, the cursor will turn green once the unit is selected, now the setting is done.

As Arranged

1. The lower limit value of each Bin cannot be greater than the upper limit value, otherwise it will influence the judgment by sorting comparator.
2. Overlapping is permitted in the range of sorting Bins.

6.2 Ring

“System ring” can be found in “System setting screen”, go to the system setting screen by referring to “Section 5.1”, select system alarm.

Consult

Further details are available in “5.1 System screens”.

When “system ring” is set to PASS and the comparator outputs P (PASS), the buzzer will be heard;

When “system ring” is set to FAIL and the comparator outputs F (FAIL), the buzzer will be heard;

When the "system ring" is set to OFF, the buzzer will not be heard. The buzzer does not alarm according to the comparator value.

Caution

1. In three sorting Bins, Bin 1 is associated with the highest sorting priority, as followed by Bin 2, 3. When Bin 1 sorting is Passed, Bin 2, 3 will not be compared and so on. Failed if only three sorting Bins are failed.
2. When sorting function is ON, the main screen will show the sorting result. When any of Bin 1, 2, 3 is Passed, green indicator will be lit on the main screen and BIN1, BIN2, BIN3 are marked. Red indicator will be lit if three Bins are failed and FAIL will be marked.

As Arranged

The result of judgment will be advised by alarm (buzzer)

6.3 PASS/FAIL indicator

PASS/FAIL indicator: an indicator for passed sorting.

Showed as overshoot/undershoot or PASS according to the output result of sorting comparator, as shown on the right.

1. Test data is passed if the green indicator is lit.

2. Test data is failed if the red indicator is lit.

6.4 Sorting process

CKT688 has 4 Bins of sorting output, i.e.: 3 Bins for PASS (P); 1 Bin for FAIL (F).

The meter will judge the sorting output of measured results according to user-defined upper and lower limits.

The sorting result of CKT688 is judged according to certain priority.

Assume the data obtained from one measurement is R, and R is first compared with the upper and lower limits of Bin 1:

If R is less than the minimum value of the lower limit of Bin 1, 2, 3, then the sorting output is FAIL (F);

If R is within the range of the upper and lower limits of Bin 1, then the sorting output is 1;

If R is greater than the upper limit of Bin 1, then Bin 2-3 will be judged in order;

If R is within the range of the upper and lower limits of Bin 2-3, then the sorting output will be the corresponding Bin;

If R is greater than the maximum value of the upper limit of Bin 1, 2, 3, then the sorting output will be FAIL (F).

If R is greater than the minimum value of the lower limit of Bin 1, 2, 3, and less than the maximum value of the upper limit of Bin 1,2,3, then the sorting output will be N with the range of any Bin.

When the sorting limits are ON, if resistance sorting is selected, the meter will only judge if the test value is greater than the lower limit;

If current sorting is selected, the meter will only judge if the test value is greater than the upper limit;

Caution

- It should be noted that if the measured resistance value is a negative value, then the sorting output will be always F.
- Prior to sorting, we need to set the upper and lower limits on the bin count screen. The user-defined upper limit must be greater than the lower limit, otherwise the comparator will not work as normal.

Chapter 7 Remote Control

By reading this chapter, you will learn about:

- RS232/485 communication mode
- Communication protocol of meter
- HANDLER interface communication mode
- USB HOST interface communication mode
- Foot switch

7.1 RS232 / 485 communication mode

1. Before connected to RS232C/485 connector

Caution

- For avoidance of accident, do not plug or unplug the communication cable during operation.
- To connect or detach communication cable, switch off the power supply of this meter and device, otherwise it may cause malfunctioning or failure.
- After connecting the communication cable, fix the screws accompanying the connector securely, otherwise it may cause malfunctioning or failure.

2. Description of interfaces

The serial communication standard currently in extensisve use is RS-232, also referred to as “asynchronous serial communication standard”, RS is:

an abbreviated term of “Recommended Standrad”, 232 is the standard number, as published by Electronic Industries Association (IEA) in 1969, which specifies that a bit is transmitted via a data cable at one time.

Caution

Like most serial ports in the world, the serial interface of this meter is not strictly based on the RS-232 standard, but only provides a smallest subset.

3. Connection method

Reference Table for RS232 Signals and Pins

Signal Description	Abbreviated Term	Connector Pin Number
Receive data	TX	2
Transmit data	RX	3
GND or shared loop for signal	GND	5

- RS232 connection:

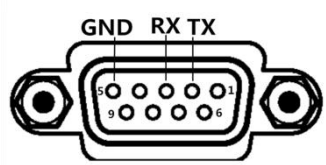

When connected to RS232, prepare a direct connection RS232 cable that fits to the specification of this meter. This meter has #2, #3 and #5 pins, no other pins are used.

- 485 connection:

  RS485 defines the electrical characteristics of drivers and receivers in a balanced digital multipoint system. This standard is defined by TIA and EIA. A digital communication network based on this standard can actively transmit signals in long distance and under high levels of electronic noise.

  485 is an optional interface, of standard 3 lines (A,B, GND)

  Communication mode allows for long-range, high-speed communication.

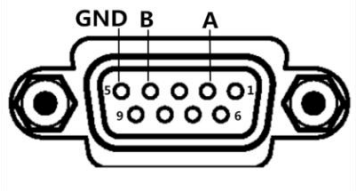

  RS485 is connected in the manner as shown on the right:

7.2 Communication protocol of meter

1. Communication protocol (normal)

This meter communicates with external control device by RS-232Casynchronous serial communication bus interface. The transmission baud rate can be preset in device (9600, 19200, 38400, provided as options). 8 data bits, 1 stop bit, no parity bit. Logic level of signal: ±12, max. transmission distance: 15 m. The serial interface is based on direct communication, only three signal lines are available for use: TXD (transmit data), RXD (receive data), GND (ground), 9-core standard interface socket is used.

1) . Data transmitted to the host (33 data bits)

Description	ASCii	Hexadecimal Code	Comment
START	:	3AH	Start bit
ADR		00H-63H	Communication address: Range: decimal 0-99. If local address in system setting is 99, then this bit is 63H.
Spare bit		03H	
Spare bit		00H	
Spare bit		01H	
Spare bit		00H	
Resistance value data	Resistance symbol+Resistance value and unit+Sorting result, all as ASCII code, 9 data bits		If +1.23450F is received, this represents +1.2345 Ω , sorting output failed. (The corresponding hexadecimal code is 2BH 31H 2EH 32H 33H 34H 35H 20H 4FH 46H) Units are O,k,M,G,T, which represent ohm, kiloohm, megaohm, G ohm, T ohm respectively, resistance open circuit. (The corresponding hexadecimal code is 4fH,6bH,4dH,47H,54H,55H respectively) Sorting results are PASS levls

			1/2/3(31H/32H/33H), FAIL Bins F(46H). Resistance value data and sorting results are fixed to 9 data bits
Current value data	Current symbol+6-bit current value+unit, all as ASCII code, 8 data bits		If +1.2345n is received, this represents 1.2345nA. Units are m,u,n,U, which represent mA,uA,nA respectively, current overrange. (The corresponding hexadecimal code is 6dH,75H,6EH,55H respectively) Current value fixed to 8 data bits
Monitoring voltage	6-bit voltage value+Unit, 7 bits		If 123.45V is received, this represents 123.45V. (The corresponding hexadecimal code is 31H 2EH 32H 33H 2EH 34H 35H 56Hrespectively, unit: V)。(The corresponding hexadecimal code is 56H) Voltage fixed to 7 data bits
Test status	1 bit		Test status: 31H: discharge 32H: wait 33H: charge 34H: test
END1	CR	0DH	End bit 1
END2	LF	0AH	End bit 2

e.g.: receive 3AH 01H 03H 00H 01H 00H 2BH 31H 2EH 32H 33H 34H 35H 20H 4DH 46H 2BH 31H 32H 2EH 33H 20H 20H 20H 75H 32H 30H 30H 2Eh 31H 30H 56H 34H 0DH 0AH

This represents that the resistance of meter is +1.2345MΩ, sorting failed; current test value: +12.3uA; voltage monitoring value: 200.1V; in this case, the bus address during test is 01.

2)、Write data to the meter

Format of host writing data to the meter: ABH + device number + high order memory address + low order memory address + 00H+00H+00H+Data+AFH; fixed to 18 data bits.

Further details about data are listed below

Seq.	Function	Memory Address	Data
01	Set the upper limit of resistance	10A1H	Which Bin (31h-33h)+3 digits before the decimal point+5 digits after the decimal point (30h-39h, i.e.: 0-9 of ASCII) +Unit (Ω,kΩ,MΩ,GΩ,TΩ; the corresponding hexadecimal codes are 4fh,6bh,4d,47,54h, i.e.: O,k,M,G,T of ASCII)
02	Set the lower limit of resistance	10A2H	The same as above
03	Set the upper limit of current	10A3H	Which Bin (31h-33h)+3 digits before the decimal point+5 digits after the decimal point (30h-39h, i.e.: 0-9 of ASCII) +Unit (nA,uA,mA; the corresponding hexadecimal codes are

			6eh,75h,6d, i.e.: n,u,m of ASCII)
04	Set the lower limit of current	10A4H	The same as above
05	Set output voltage	10A5H	4 digits before the decimal point+3 digits after the decimal point (30h-39h,i.e.: 0-9 of ASCII) 00H 00H 00H
06	Set charging time	10C1H	Hundreds+Tens+Single+1 digits after the decimal point(30h-39h, i.e.: 0-9 of ASCII) 00H 00H 00H 00H 00H 00H
07	Set waiting time	10C2H	Hundreds+Tens+Single+1 digits after the decimal point (30h-39h, i.e.: 0-9 of ASCII) 00H 00H 00H 00H 00H 00H
08	Set measurement time	10C3H	Hundreds+Tens+Single+1 digits after the decimal point (30h-39h, i.e.: 0-9 of ASCII) 00H 00H 00H 00H 00H 00H
09	Set discharge time	10C4H	Hundreds+Tens+Single+1 digits after the decimal point (30h-39h, i.e.: 0-9 of ASCII) 00H 00H 00H 00H 00H 00H
06	Set 0 ADJ	10A6H	ON (01H) or OFF (00H) 00H 00H 00H 00H 00H 00H 00H 00H 00H
07	Set measurement mode	10A7H	Measurment mode (00H: Continuous 01H: Single) 00H 00H 00H 00H 00H 00H 00H 00H 00H
08	Set speed	10A8H	Speed (00H: Fast 01H: Slow) 00H 00H 00H 00H 00H 00H 00H 00H 00H
09	Set range	10A9H	Range (00H: Auto 01H: 0.2nA 02H:2nA 03H:20nA 04H:200nA 05H:2uA 06H:20uA 07H:200uA) 00H 00H 00H 00H 00H 00H 00H 00H 00H
010	Set TRIG	10AAH	TRIG (00H:Internal 01H:External) 00H 00H 00H 00H 00H 00H 00H 00H 00H
011	Pick items	10AbH	Pick items (00H:Resistance 01H:Current) 00H 00H 00H 00H 00H 00H 00H 00H 00H
012	Pick limits	10ACH	Pick limits (00H:OFF 01H:ON) 00H 00H 00H 00H 00H 00H 00H 00H 00H
013	TRIG signal	10ADH	TRIG (00H: Not trigged 01H: Trigged) 00H 00H 00H 00H 00H 00H 00H 00H 00H
014	Average	10AEH	Tens + Single (30h-39h, i.e.: 0-9 of ASCII). If the average value is set to 98, then the data bit is 39H+38H+00H 00H 00H 00H 00H 00H 00H 00H
015	TRIG edge	10B1H	TRIG mode (00: Falling edge 01: Rising edge) 00H 00H 00H 00H 00H 00H 00H 00H 00H
016	Sorting Bins	10B2H	Sorting Bins (02h: Bin 3 01h: Bin 2 00h: Bin 1) 00H 00H 00H 00H 00H 00H 00H 00H 00H
017	System language	10B3H	Language (00h :Chinese 01h:English) 00H 00H 00H 00H 00H 00H 00H 00H 00H
018	Ring	10B4H	Alarm (0: PASS 1: FAIL 2: OFF) 00H 00H 00H 00H 00H 00H 00H 00H 00H

019	Zoom in	10B5H	Zoom in (0: OFF 1: ON) 00H 00H 00H 00H 00H 00H 00H 00H 00H
020	Key tone	10B6H	Key tone (01H :OFF 00H:ON) 00H 00H 00H 00H 00H 00H 00H 00H 00H
022	U disk switch	10B7H	U disk switch (00H:OFF 01H:ON) 00H 00H 00H 00H 00H 00H 00H 00H 00H

e.g.: transmit ABH 01H 10H A1H 00H 00H 00H 31H 31H 30H 30H 32H 35H 00H 00H 00H 6DH AFH.

This represents that the upper limit of resistance value is 100.25 kΩ. Local address is 01

Transmit ABH 01H 10H B4H 00H 00H 00H 01H 00H 00H 00H 00H 00H 00H 00H 00H 00H AFH. This represents that the set alarm is failed. Local address is 01

2. Communication protocol (modbus)

This meter communicates with external control device by RS-232Casynchronous serial communication bus interface. The transmission baud rate can be preset in device (9600, 19200, 38400, provided as options). 8 data bits, 2 stop bits, no parity bit.

Logic level of signal: ±12, max. transmission distance: 15 m. The serial interface is based on direct communication, only three signal lines are available for use: TXD (transmit data), RXD (receive data), GND (ground), 9-core standard interface socket is used.

1). Read command (function code: 03H)

Data is transmitted in the following format (7 data bits):

Address	Function code	High order address	Low order address	High order data length, fixed to 00H	Low order data length, fixed to 0dH	CRC low	CRC high

Address: local address, configurable, range: 0-99, i.e.: 00H-63H

Function code; 03H. Read test value of the device

High/Low order address: memory address of test value, fixed to 0001H.

High/Low order data length: data length to be read. This data length is 2 folds of the data bytes to be returned from the meter.

CRC Low/High: CRC-16 MODBUS check.

e.g.: 01H 03H 00H 01H 00H 0dH D5H CFH: query test values from #01 meter

Test values of the meter (resistance value, current value, monitoring voltage, test status) are on the address 0001H.

When the host requests test values from the meter, no matter how many bytes are included in the transmit command, the values returned from the host will return complete test data (i.e.: resistance value+current value+monitoring voltage+test status, 31 data items)

Data is returned in the following format:

Description	Hexadecimal Code	Comment
START		Rest time over 10ms
ADR	00H-63H	Communication address: Range: decimal 0-99. If local address in system setting is 99, then this bit is 63H.
CMD	03H	Command code
Data bytes	1AH	The resistance value, current value, monitoring voltage and test status are of 26 data bits, so data bytes is 001AH if converted to hexadecimal system.
Resistance value data	Resistance symbol+Resistance value and unit+Sorting result, all as ASCII code, 9 data bits	If +1.23450F is received, this represents +1.2345Ω, sorting output failed. (The corresponding hexadecimal code is 2BH 31H 2EH 32H 33H 34H 35H 20H 4FH 46H) Units are O,k,M,G,T, which represent ohm, kiloohm, megaohm, G ohm, T ohm respectively, resistance open circuit. (The corresponding hexadecimal code is 4fH,6bH,4dH,47H,54H,55H respectively) Sorting results are PASS levls 1/2/3(31H/32H/33H), FAIL Bins F(46H). Resistance value data and sorting results are fixed to 9 data bits
Current value data	Current symbol+6-bit current value+unit, all as ASCII code, 8 data bits	If +1.2345n is received, this represents 1.2345nA. Units are m,u,n,U, which represent mA,uA,nA respectively, current overrange. (The corresponding hexadecimal code is 6dH,75H,6EH,55H respectively) Current value fixed to 8 data bits
Monitoring voltage	6-bit voltage value+Unit, 7 bits	If 123.45V is received, this represents 123.45V. (The corresponding hexadecimal code is 31H 2EH 32H 33H 2EH 34H 35H 56Hrespectively, unit: V)。(The corresponding hexadecimal code is 56H) Voltage fixed to 7 data bits
Test status	1 bit	Test status: 31H: discharge 32H: wait 33H: charge 34H: test
Spare bit	Fixed to 00H	Fixed to 00H
CRC low	CRC check low order	
CRC high	CRC check high bit	
END		Rest time over 10ms

e.g.: receive 01H 03H 1AH 2BH 31H 2EH 32H 33H 34H 20H 6bH 46H 2BH 31H 32H 2EH 33H 34H 35H 75H 31H 30H 30H 2EH 30H 30H 34H 00H A6H 5FH

This represents that the resistance of this meter is +1.234mΩ, sorting overshoot, temperature test value: 12.3℃, local address: 01, CRC check value: 5FA6H.

2). Write instruction (function code: 10H)

Data is transmitted in the following format:

Address	Function code	High order address	Low order address	High order data size (word)	Low order data size (word)	Data size (Byte)	1-n Data byte 1-n	CRC low	CRC high

Data is returned in the following format:

Address	Function code	High order address	Low order address	High order data size (word)	Low order data size (word)	CRC Low	CRC High

The meaning of each parameter will be illustrated below:

2.1 Address

Communication address: range: decimal 0-99. If local address in the system setting is 99, then this bit is 63H

2.2 Function code

Write one or more bytes of data to the instrument. The function code is 10H

2.3 High order address+Low order address

Refer to Table 6-1 for memory address of each parameter in the meter.

2.4. Data size (word)

How many data groups written to the memory address of parameters. Fixed to 0001H

2.5. Byte

How many byte data written to the memory address of parameters.

2.6 Data byte 1-n.

Further details are listed in Table 6-1

Seq.	Function	Memory Address	Data
01	Set the upper limit of resistance	10A1H	Which Bin (31h-33h)+3 digits before the decimal point+5 digits after the decimal point (30h-39h, i.e.: 0-9 of ASCII) +Unit (Ω, kΩ, MΩ, GΩ, TΩ; the corresponding hexadecimal codes

			are 4fh,6bh,4d,47,54h, i.e.: O,k,M,G,T of ASCII)
02	Set the lower limit of resistance	10A2H	The same as above
03	Set the upper limit of current	10A3H	Which Bin (31h-33h)+3 digits before the decimal point+5 digits after the decimal point (30h-39h,i.e.: 0-9 of ASCII) +Unit (nA,uA,mA; the corresponding hexadecimal codes are 6eh,75h,6d, i.e.: n,u,m of ASCII)
04	Set the lower limit of current	10A4H	The same as above
05	Set output voltage	10A5H	4 digits before the decimal point+3 digits after the decimal point (30h-39h,i.e.: 0-9 of ASCII) 00H 00H 00H
06	Set charging time	10C1H	Hundreds+Tens+Single (30h-39h, i.e.: 0-9 of ASCII) 00H 00H 00H 00H 00H 00H 00H
07	Set waiting time	10C2H	Hundreds+Tens+Single (30h-39h, i.e.: 0-9 of ASCII) 00H 00H 00H 00H 00H 00H 00H
08	Set measurement time	10C3H	Hundreds+Tens+Single (30h-39h, i.e.: 0-9 of ASCII) 00H 00H 00H 00H 00H 00H 00H
09	Set discharge time	10C4H	Hundreds+Tens+Single (30h-39h, i.e.: 0-9 of ASCII) 00H 00H 00H 00H 00H 00H 00H
06	Set zero	10A6H	ON (01H) or OFF (00H) 00H 00H 00H 00H 00H 00H 00H 00H 00H
07	Set measurement mode	10A7H	Measurment mode (00H: Continuous 01H: Single) 00H 00H 00H 00H 00H 00H 00H 00H 00H
08	Set speed	10A8H	Speed (00H: Fast 01H: Slow) 00H 00H 00H 00H 00H 00H 00H 00H 00H
09	Set range	10A9H	Range (00H: Auto 01H: 0.2nA 02H:2nA 03H:20nA 04H:200nA 05H:2uA 06H:20uA 07H:200uA) 00H 00H 00H 00H 00H 00H 00H 00H 00H
010	Set TRIG	10AAH	TRIG (00H:Internal 01H:External) 00H 00H 00H 00H 00H 00H 00H 00H 00H
011	Pick items	10AbH	Pick items (00H:Resistance 01H:Current) 00H 00H 00H 00H 00H 00H 00H 00H 00H
012	Sorting limits	10ACH	Pick limits (00H:OFF 01H:ON) 00H 00H 00H 00H 00H 00H 00H 00H 00H
013	TRIG signal	10ADH	TRIG (00H: Not trigged 01H: Trigged) 00H 00H 00H 00H 00H 00H 00H 00H 00H
014	Average	10AEH	Tens + Single (30h-39h, i.e.: 0-9 of ASCII). If the average value is set to 98, then the data bit is 39H+38H+00H 00H 00H 00H 00H 00H 00H 00H
015	TRIG edge	10B1H	TRIG mode (00: Falling edge 01: Rising edge) 00H 00H 00H 00H 00H 00H 00H 00H 00H

016	Sorting Bins	10B2H	Sorting Bins (02h: Bin 3 01h: Bin 2 00h: Bin 1) 00H 00H 00H 00H 00H 00H 00H 00H 00H
017	System language	10B3H	Language (00h :Chinese 01h:English) 00H 00H 00H 00H 00H 00H 00H 00H 00H
018	Alarm	10B4H	Alarm (0: PASS 1: FAIL 2: OFF) 00H 00H 00H 00H 00H 00H 00H 00H 00H
019	Zoom in	10B5H	Zoom in (0: OFF 1: ON) 00H 00H 00H 00H 00H 00H 00H 00H 00H
020	Key tone	10B6H	Key tone (01H :OFF 00H:ON) 00H 00H 00H 00H 00H 00H 00H 00H 00H
022	U disk switch	10B7H	U disk switch (00H:OFF 01H:ON) 00H 00H 00H 00H 00H 00H 00H 00H 00H

e.g.: transmit01H 10H 10H A1H 00H 05H 0AH 31H 31H 30H 30H 32H 35H 30H 30H 30H 4DH D9H 05H.

This presents that the upper limit of #01 device resistance is set to 100.25 MΩ.

2.7 16-bit CRC check

1. In the first step, define 2 check tables and each has 256 bytes

```
const BYTE chCRCHTalbe[]
=                                                                    // CRC high
order byte value table
{
0x00, 0xC1, 0x81, 0x40, 0x01, 0xC0, 0x80, 0x41, 0x01, 0xC0, 0x80, 0x41,
0x00, 0xC1, 0x81, 0x40, 0x01, 0xC0, 0x80, 0x41, 0x00, 0xC1, 0x81, 0x40,
0x00, 0xC1, 0x81, 0x40, 0x01, 0xC0, 0x80, 0x41, 0x01, 0xC0, 0x80, 0x41,
0x00, 0xC1, 0x81, 0x40, 0x00, 0xC1, 0x81, 0x40, 0x01, 0xC0, 0x80, 0x41,
0x00, 0xC1, 0x81, 0x40, 0x01, 0xC0, 0x80, 0x41, 0x01, 0xC0, 0x80, 0x41,
0x00, 0xC1, 0x81, 0x40, 0x01, 0xC0, 0x80, 0x41, 0x00, 0xC1, 0x81, 0x40,
0x00, 0xC1, 0x81, 0x40, 0x01, 0xC0, 0x80, 0x41, 0x00, 0xC1, 0x81, 0x40,
0x01, 0xC0, 0x80, 0x41, 0x01, 0xC0, 0x80, 0x41, 0x00, 0xC1, 0x81, 0x40,
0x00, 0xC1, 0x81, 0x40, 0x01, 0xC0, 0x80, 0x41, 0x01, 0xC0, 0x80, 0x41,
0x00, 0xC1, 0x81, 0x40, 0x01, 0xC0, 0x80, 0x41, 0x00, 0xC1, 0x81, 0x40,
0x00, 0xC1, 0x81, 0x40, 0x01, 0xC0, 0x80, 0x41, 0x01, 0xC0, 0x80, 0x41,
0x00, 0xC1, 0x81, 0x40, 0x00, 0xC1, 0x81, 0x40, 0x01, 0xC0, 0x80, 0x41,
0x00, 0xC1, 0x81, 0x40, 0x01, 0xC0, 0x80, 0x41, 0x01, 0xC0, 0x80, 0x41,
0x00, 0xC1, 0x81, 0x40, 0x00, 0xC1, 0x81, 0x40, 0x01, 0xC0, 0x80, 0x41,
0x01, 0xC0, 0x80, 0x41, 0x00, 0xC1, 0x81, 0x40, 0x01, 0xC0, 0x80, 0x41,
0x00, 0xC1, 0x81, 0x40, 0x00, 0xC1, 0x81, 0x40, 0x01, 0xC0, 0x80, 0x41,
0x00, 0xC1, 0x81, 0x40, 0x01, 0xC0, 0x80, 0x41, 0x01, 0xC0, 0x80, 0x41,
0x00, 0xC1, 0x81, 0x40, 0x01, 0xC0, 0x80, 0x41, 0x00, 0xC1, 0x81, 0x40,
0x00, 0xC1, 0x81, 0x40, 0x01, 0xC0, 0x80, 0x41, 0x01, 0xC0, 0x80, 0x41,
0x00, 0xC1, 0x81, 0x40, 0x00, 0xC1, 0x81, 0x40, 0x01, 0xC0, 0x80, 0x41,
0x00, 0xC1, 0x81, 0x40, 0x01, 0xC0, 0x80, 0x41, 0x01, 0xC0, 0x80, 0x41,
0x00, 0xC1, 0x81, 0x40
```

```
};

//CRC Low byte value table

//CRC low order byte value table

const BYTE chCRCLTalbe[]
=
{
0x00, 0xC0, 0xC1, 0x01, 0xC3, 0x03, 0x02, 0xC2, 0xC6, 0x06, 0x07, 0xC7,
0x05, 0xC5, 0xC4, 0x04, 0xCC, 0x0C, 0x0D, 0xCD, 0x0F, 0xCF, 0xCE, 0x0E,
0x0A, 0xCA, 0xCB, 0x0B, 0xC9, 0x09, 0x08, 0xC8, 0xD8, 0x18, 0x19, 0xD9,
0x1B, 0xDB, 0xDA, 0x1A, 0x1E, 0xDE, 0xDF, 0x1F, 0xDD, 0x1D, 0x1C, 0xDC,
0x14, 0xD4, 0xD5, 0x15, 0xD7, 0x17, 0x16, 0xD6, 0xD2, 0x12, 0x13, 0xD3,
0x11, 0xD1, 0xD0, 0x10, 0xF0, 0x30, 0x31, 0xF1, 0x33, 0xF3, 0xF2, 0x32,
0x36, 0xF6, 0xF7, 0x37, 0xF5, 0x35, 0x34, 0xF4, 0x3C, 0xFC, 0xFD, 0x3D,
0xFF, 0x3F, 0x3E, 0xFE, 0xFA, 0x3A, 0x3B, 0xFB, 0x39, 0xF9, 0xF8, 0x38,
0x28, 0xE8, 0xE9, 0x29, 0xEB, 0x2B, 0x2A, 0xEA, 0xEE, 0x2E, 0x2F, 0xEF,
0x2D, 0xED, 0xEC, 0x2C, 0xE4, 0x24, 0x25, 0xE5, 0x27, 0xE7, 0xE6, 0x26,
0x22, 0xE2, 0xE3, 0x23, 0xE1, 0x21, 0x20, 0xE0, 0xA0, 0x60, 0x61, 0xA1,
0x63, 0xA3, 0xA2, 0x62, 0x66, 0xA6, 0xA7, 0x67, 0xA5, 0x65, 0x64, 0xA4,
0x6C, 0xAC, 0xAD, 0x6D, 0xAF, 0x6F, 0x6E, 0xAE, 0xAA, 0x6A, 0x6B, 0xAB,
0x69, 0xA9, 0xA8, 0x68, 0x78, 0xB8, 0xB9, 0x79, 0xBB, 0x7B, 0x7A, 0xBA,
0xBE, 0x7E, 0x7F, 0xBF, 0x7D, 0xBD, 0xBC, 0x7C, 0xB4, 0x74, 0x75, 0xB5,
0x77, 0xB7, 0xB6, 0x76, 0x72, 0xB2, 0xB3, 0x73, 0xB1, 0x71, 0x70, 0xB0,
0x50, 0x90, 0x91, 0x51, 0x93, 0x53, 0x52, 0x92, 0x96, 0x56, 0x57, 0x97,
0x55, 0x95, 0x94, 0x54, 0x9C, 0x5C, 0x5D, 0x9D, 0x5F, 0x9F, 0x9E, 0x5E,
0x5A, 0x9A, 0x9B, 0x5B, 0x99, 0x59, 0x58, 0x98, 0x88, 0x48, 0x49, 0x89,
0x4B, 0x8B, 0x8A, 0x4A, 0x4E, 0x8E, 0x8F, 0x4F, 0x8D, 0x4D, 0x4C, 0x8C,
0x44, 0x84, 0x85, 0x45, 0x87, 0x47, 0x46, 0x86, 0x82, 0x42, 0x43, 0x83,
0x41, 0x81, 0x80, 0x40

};
```

3). Then run the operation

```
WORD CRC16(BYTE* pchMsg, WORD wDataLen)
{
BYTE chCRCHi = 0xFF; // High CRC byte initialization
  BYTE chCRCLo = 0xFF; // Low CRC byte initialization
WORD wIndex;                        // Index in CRC loop
while (wDataLen--)
  {
// Calcuate CRC
wIndex = chCRCLo ^ *pchMsg++ ;
chCRCLo = chCRCHi ^ chCRCHTalbe[wIndex];
  chCRCHi = chCRCLTalbe[wIndex] ;
}
  return ((chCRCHi << 8) | chCRCLo) ;
```

}

7.3 HANDLER communication mode

Caution

- To shield the interface from damage, the mains voltage must not exceed the mains requirement.
- To shield the interface from damage, switch off the meter, then connect cables.

1. Description of pins:

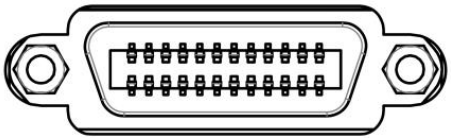

1)、START signal, trigger by rising edge or falling edge, pulse width≈4—30mS. A Bin TRIG signal can be only measured once. If it is always low level signal, then it can be only measured once.

2)、EOM signal, active low, , if it is low, this means that the sorting signal has been active, only the result is not displayed; if it is high, this means that the device is under measurement.

3)、Bin X sorting output signal, active low

Pin	Function
1	Bin 1 compare result output signal, active low.
2	Bin 2 compare result output signal, active low.
3	Bin 3 compare result output signal, active low.
4	Overshoot/Undershoot/sorting failure compare result output signal, active low.
5-14	Null
15	EOM signal, active low. If it is high level, this means that the test has not yet come to an end
16-17	Null
18	START signal, active falling edge. When the meter is externally triggered and this signal is active, the meter performs a measurement and sorting.
19	Null
20	External power source connected to negative terminal (external power source grounded), if there is not external power input, this pin is an internal suspended earth wire (non-grounded)
21-23	Null
24	External interface power connected to positive terminal (12-24V), if there is not external power input, this pin is internal+10V

2. Time sequence table

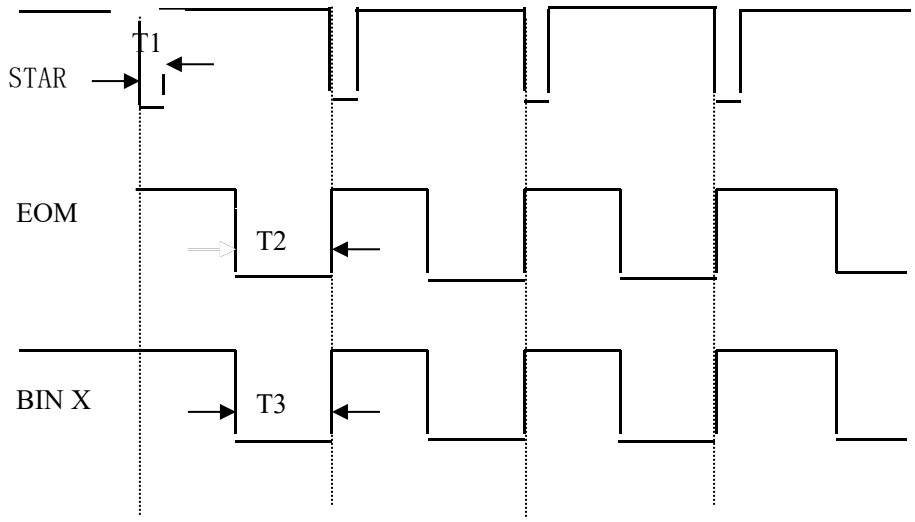

7.4 Foot switch

Q9 socket provided on the rear panel can be connected to foot switch for test start and stop

1. Connect foot switch

Consult Further details are available in “3.4”.

2. Use:

CKT688 Insulation Resistance meterprovides user with a foot switchinterface.

To use foot switch, the meter can be set to internal TRIG mode, foot switch has the same function as TRIG/ESC button on the front panel, that is for switchover between charging test and discharge;

When the meter is set as external trigger, foot switch has the same function as START signal of HANDLER interface, that is for external start of test.

The steps for how to use foot switch are described below:

1）、Connect Q9 socket of foot switch to START interface on the rear panel of the meter.

2）、Trigger mode set as external or internal, the charging time is set according to test needs.

3）、Tread on foot switch. If the trigger mode is set to external TRIG, the meter will run charging-testing-discharging once upon the receipt of TRIG signal. If the trigger mode is set to internal TRIG, the meter will run charging/discharging upon the receipt of TRIG signal.

Chapter 8 Maintenance and Service

By reading this chapter, you will learn about:

- About calibration
- Packaging and transportation
- Storage
- Warranty
- Cleaning
- About disposal

8.1 About calibration

Caution Attention: To obtain correct measured value within the specified accuracy range, this meter should be calibrated at regular intervals.

The calibration period varies depending on operating conditions or environment. It is recommended to determine the calibration period according to operating conditions or environment. And ask us to perform regular calibration.

8.2 Packaging and transportation

To transport this meter, wrap the same packaging material as that for delivery. Handle with care and prevent moisture and rainwater during transportation.

For repair service, wrap the packaging material to the extent that it will not break or damage during transportation, we will not provide warranty coverage for any breakage or damage as a result of transportation.

8.3 Storage

The meter is stored in a well-ventilated room with ambient conditions: 0℃～40℃, relative humidity≤80%, free from harmful impurities that may corrode the measuring meter.

8.4 Warranty

Warranty period: For anyone who buys this meter from the company, the warranty period is effective from the date of shipment. For any anyone who buys this meter from business unit, the warranty period is 2 years as effective from the date of shipment from the business unit. Any user who requests for warranty service should present the Warranty Card. During the warranty period, any user who causes breakdown due to mishandling must bear the repair cost. This meter will be covered for lifelong repair service.

This meter must be only repaired by professional; do not attempt to replace any part in the meter without prior approval; any meter which goes through repair service must

be recalibrated for fear of undermining the test accuracy. The breakdown of this meter as a result of unauthorized replacement of any part is not covered in the warranty service, so user must solely bear the repair cost.

8.5 Cleaning

- To prevent electric shock, unplug the power cord before cleaning.
- Wipe the enclosure and panel gently with a clean soft cloth soaked with a little water or neutral detergent.
- Never attempt to clean inside the meter.

Caution Never attempt to clean the meter with solvents (e.g.: alcohol, gasoline, acetone, methyl ketone, thinner, oily detergent).

8.6 About disposal

This meter and optional parts must be disposed by following local regulations.

Annex A: Specifications

By reading Annex A, you will learn about:

- Technical indexes
- Main features and functions
- Technical specifications

Technical Indexes

The data below is measured under the following conditions:

Temperature condition: 23℃±5℃ Humidity condition: ≤80% R.H. Zero adjustment: zero before test

Warm-up time: >60 mins Calibration time: 1 year

Model	CKT688	CKT688B
Test parameters	Insulation resistance (IR), micro current (I)	Insulation resistance (IR), micro current (I)
Measuring range	Resistance: 10KΩ-10TΩ Current: 1mA~0.01pA	Resistance: 10KΩ-5TΩ Current: 1mA~0.01pA
Current accuracy	I＞10nA: ±2% I≤10nA: ±5% I≤1nA: ±10%	I＞10nA: ±2% I≤10nA: ±5% I≤1nA: ±10%
Resistance accuracy	10K-10T Calculated according to the current accuracy	
Voltage range	0.5-1000V	0.5-500V
Voltage accuracy	Voltage≥10V ±0.25%+0.5V Voltage＜10V ±1%+0.5V	Voltage≥10V ±0.25%+0.5V Voltage＜10V ±1%+0.5V
Read-back voltage accuracy	±0.25%+0.25V	±0.25%+0.25V

Main features and functions:

1. Super bright, ultra HD 4.3’’ LCD display: pixels: 480*272, several parameters are displayed simultaneously.

2. Sorting result, insulation resistance and leakage current are displayed on the same screen.

3. Multiple TRIG modes: internal TRIG, external TRIG, foot switch TRIG, interface TRIG.

4. Correction function: full range open-circuit zero function.

5. 4-Bin comparison: passed with 3 Bins, failed with 1 Bin.

6. Comparator (sorting) function: built-in 4-Bin sorting data, PASS/FAIL judgment on the DUT.

- Comparator function display: directly shown as mark on LCD and/showed by display window
- Comparator output: further details of sorting results are output through the optional Handler interface and RS232 interface.
- Alarm: PASS/FAIL alarm can be set or alarm can be turned off.

7. Material charging time can be set.

8. Programmable sequential test mode: material charging time, waiting time, measurement time, and discharge time can be set.

9. 5 groups of test parameters can be saved in the meter.

10. Interface function:

- Handler interface: sorting result, comparison Bin selection input, TRIG signal input, EOM signal output.
- RS232 interface: three-wire simple serial interface serves to communicate and connect with the host.
- USB HOST: USB communication cable services to communicate and connect with the host computer.
- USB DEVICE: U disk is connected to the meter and save the test data. Remote firmware upgrades supported.
- Foot switch start supported

Technical Specifications:

1、Screen: super bright, ultra HD 4.3’’ colored LCD display: pixels: 480*272.

2、Display range: 4-digit resistance value display.

3、Test parameters: insulation resistance, micro current;

4、Measuring range: 7-Bin measuring range, manual or auto mode.

5、Basic accuracy: 10K-10T(I＞10nA ±2% I＜10nA ±5% I＜1nA ±10%)

6. Measuring range of insulation resistance: CKT688： 10KΩ～10TΩ ; resolution: 0.1 $\times 10^{3}\Omega$～ 0.1$\times 10^{13}\Omega$

CKT688B： 10KΩ～5TΩ ; resolution: 0.1$\times 10^{3}\Omega$～ 0.1$\times 10^{13}\Omega$

7、Test voltage range: CKT688： 0.5V～1000V CKT688B： 0.5V～500V

8、Test speed: fast: 12 times/sec; slow: 5 times/sec.

9、Test terminal: 3 GUARD terminals and outer GUARD terminal

10、Ambient conditions:

- Indexes: temperature 18℃～28℃humidity <80% RH
- Working conditions: temperature 0℃～40℃humidity <80% RH
- Storage conditions: temperature 0℃～40℃humidity <80% RH

11、Mains: AC 220V±10％ frequency: 50/60Hz, power: maximum 30VA fuse: 0.5A slow blow

12、Weight: ≈4.5kg (incl. package).

13、 Accompanying accessories: User Manual, Test Report, Product Certification, Warranty Card, Packing List, meter, power cord, fuse, 3-terminal Kelvin test clip, RS232 communication cable, USB communication line, cable, foot switch (optional)

14、Overall dimensions: internal dimensions: L*W*H：335 mm * 86 mm * 216 mm

external dimensions: L*W*H：361 mm * 107 mm * 264 mm

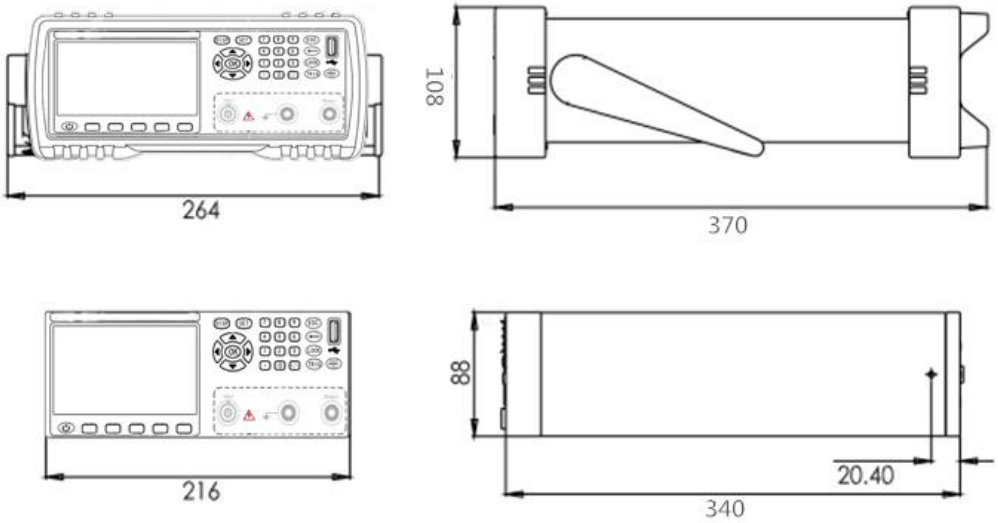

Annex B: Type Selection Table

By reading Annex B, you will learn about:

- Type Selection Table of Electrode Box
- Type Selection Table of Insulation Resistance Meter

Type Selection Table of Electrode Box

Test electrodes (clips) can be used for CKT688, CKT688B high resistance meters, ultra-high resistance meters, and insulation resistance testers to measure the resistance, volume resistivity and surface resistivity or electrical conductivity of a plurality of materials (in solid or liquid state), which is exactly consistent with the test method of insulation resistance, volume resistivity and surface resistance for solid electrical insulation materials as contained in GB1410—2006, and test methods of DC resistance or conductivity for insulation materials as contained in ASTM D257. This meter can apply to the test of volume resistances and insulating materials in all industries!

Model	Name	Sketch Map	Applicable supporting instruments	Applications
CKT25101	10^{13} Ω electrode box		Used with test electrodes (clips), CKT688/B, CKT5013 high resistance meters, ultra-high resistance meters, and insulation resistance testers	Applicable to determination of the volume and surface resistance of a plurality of insulating materials in rubber, plastic, film, carpets, fabrics, powder, liquid forms, and in solid and paste forms.

Type Selection Table of Insulation Resistance Meter

Model	Measuring Range	Basic Accuracy	Test Voltage	Test Parameter	Foot Switch	USB	RS-232	Handler	U disk interface	Comparision or function
CKT688	Resistance: $1*10^{3}\Omega$ $-1*10^{13}\Omega$	3% - 10%	0.5V-1000V	Insulation resistance, feeble current	Optional	√	√	√	√	√
CKT688B	Resistance: $1*10^{3}\Omega$ $-0.5*10^{13}\Omega$	3% - 10%	0.5V-500V	Insulation resistance, feeble current	Optional	√	√	√	√	√

CHANGZHOU CHUANGKAI ELECTRONIC CO., LTD

ADD: Room 438, No.5-2, Taihu West Road, Xinbei District, Changzhou, Jiangsu, China

Zip Code: 213001

Phone: 0519-88055895

Website:www.cz-ckt.com

Email: sales@cz-ckt.com